Sales Code: BAYC101 **Barcode:** 5055275892367 **Brand:** Bayswater **Description:** Bayswater Porchester 1 Tap Hole 600mm Ceramic Basin



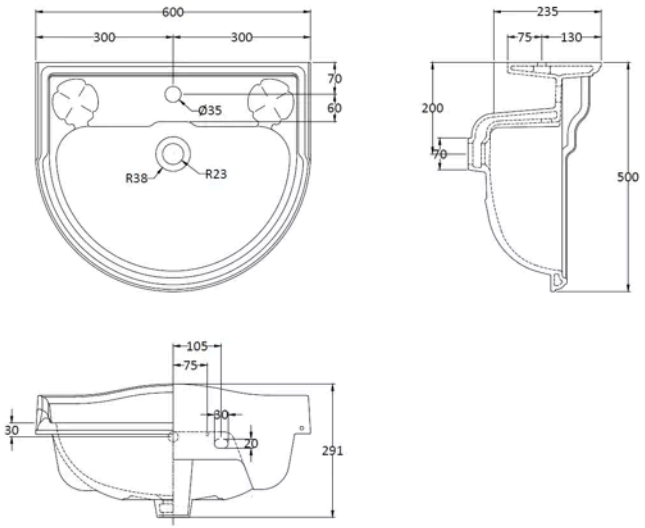

Product Dimensions

Product	291 x 600 x 500mm (H x W x D)
Packaged	510 x 610 x 310mm (H x W x D)
Nett Weight	17.6 kg
Packaged Weight	18.4 kg

Product Details

Country of Origin	China
Product Material	Vitreous China
Colour/Finish	White
Style	Traditional
Ce Certified	Yes
Inner Bowl Height	175 mm
No. Of Tapholes	1
Number Of Bowls	1
Overflow Cover Included	No
Overflow Included	Yes
Tap Included	No
Waste Included	No

© ROXOR Group