Sales Code: BAYC027 **Barcode:** 5056462670492 **Brand:** Bayswater **Description:** Bayswater Fitzroy Traditional Wall Hung Pan



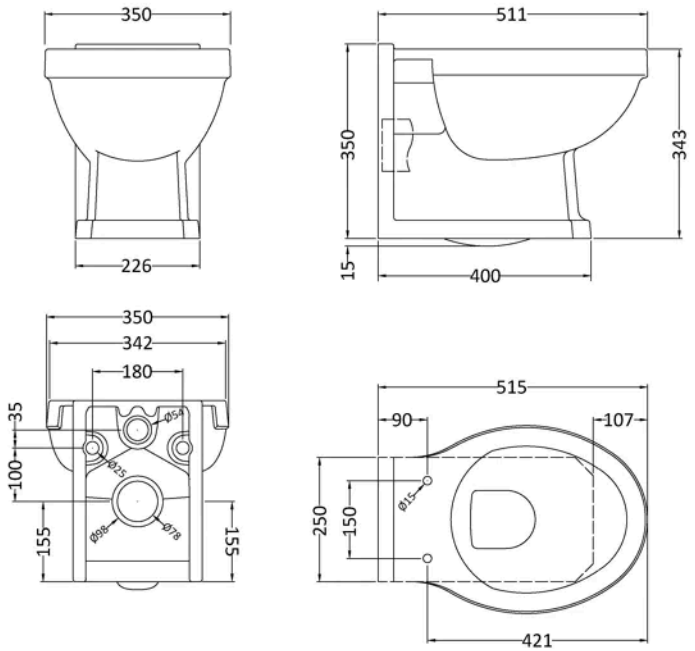

Product Dimensions

Packaged	490 x 380 x 540mm (H x W x D)
Nett Weight	21 kg
Packaged Weight	21.5 kg

© ROXOR Group