Sales Code: BAYC026 **Barcode:** 5056211869252 **Brand:** Bayswater **Description:** Bayswater 560mm 1 Tap Hole Semi-recessed Basin



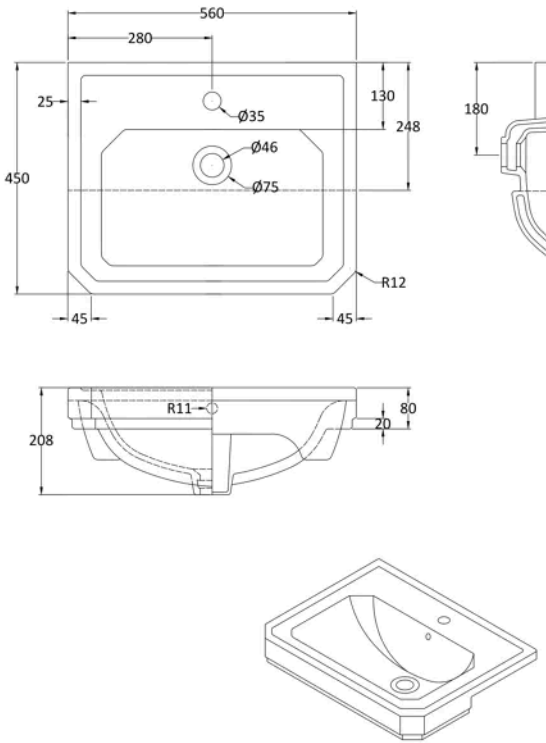

Product Dimensions

Product	208 x 560 x 450mm (H x W x D)
Packaged	220 x 460 x 570mm (H x W x D)
Nett Weight	14.6 kg
Packaged Weight	15.2 kg

Product Details

Country of Origin	China
Product Material	Vitreous China
Colour/Finish	White
Style	Traditional
Ce Certified	Yes
Inner Bowl Height	110 mm
No. Of Tapholes	1
Number Of Bowls	1
Overflow Cover Included	No
Overflow Included	Yes
Tap Included	No
Waste Included	No

© ROXOR Group