Sales Code: BAYC016 **Barcode:** 5055275892282 **Brand:** Bayswater **Description:** Bayswater Fitzroy Traditional Comfort Height Toilet Pan



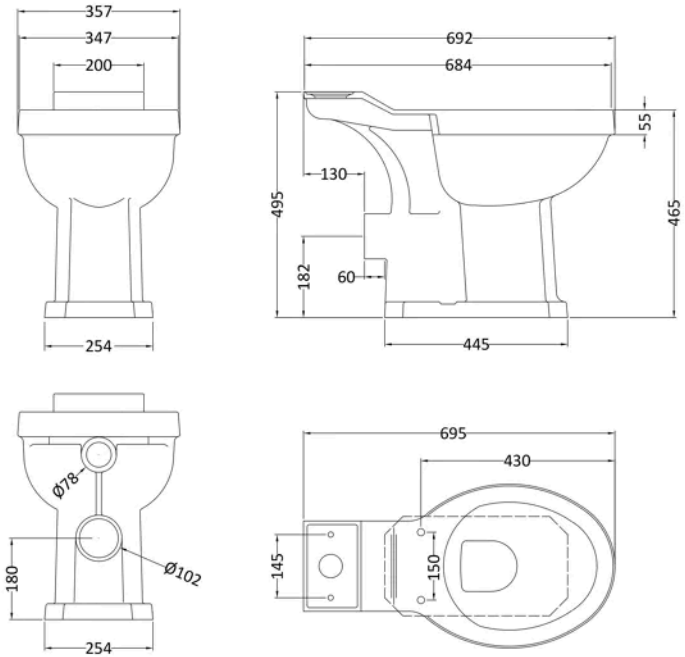

Product Dimensions

Product	495 x 355 x 700mm (H x W x D)
Packaged	505 x 700 x 380mm (H x W x D)
Nett Weight	21 kg
Packaged Weight	22 kg

Product Details

Country of Origin	China
Product Material	Vitreous China
Colour/Finish	White
Style	Traditional

© ROXOR Group