Sales Code: BAYC013 **Barcode:** 5055275892251 **Brand:** Bayswater **Description:** Bayswater Fitzroy 1 Tap Hole Ceramic Corner Basin



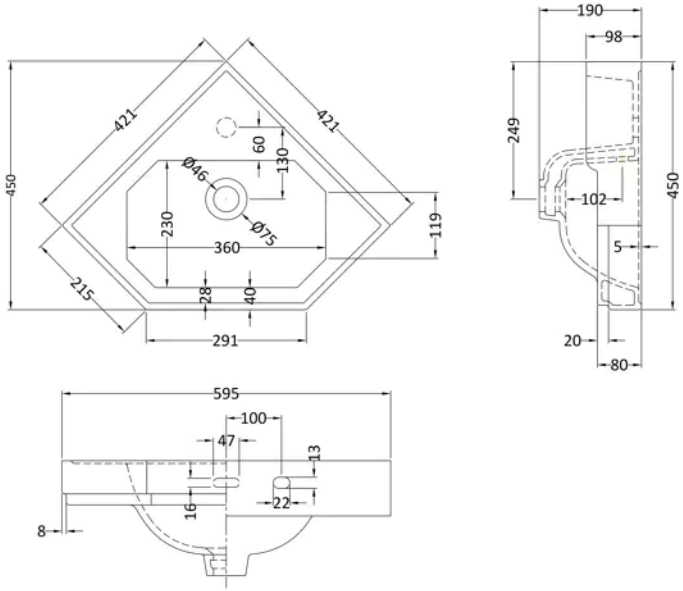

Product Dimensions

Packaged	210 x 400 x 440mm (H x W x D)
Nett Weight	9 kg
Packaged Weight	9.5 kg

© ROXOR Group