Sales Code: BAYB112MB **Barcode:** 5056817794378 **Brand:** Bayswater **Description:** Bayswater 1500mm Painted Matt Black Freestanding Shower Bath



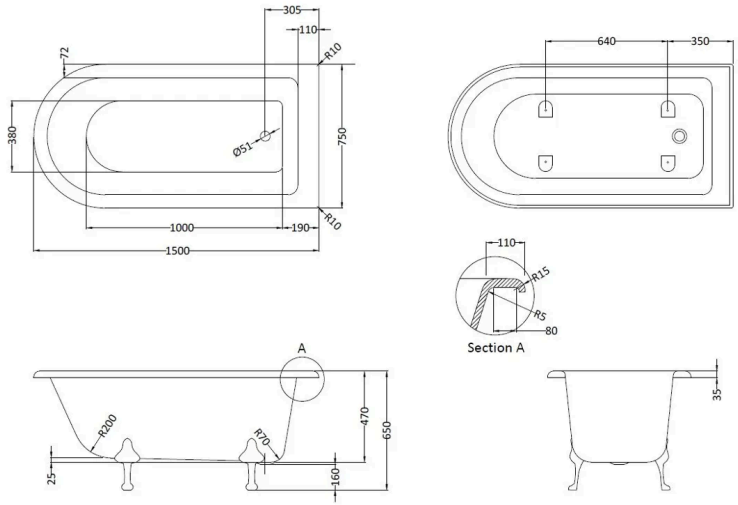

Product Dimensions

Product	470 x 750 x 1490mm (H x W x L)
Packaged	500 x 750 x 1500mm (H x W x D)
Nett Weight	45 kg
Packaged Weight	45.8 kg

Product Details

Volume	175 Litre
Country of Origin	China
Product Material	Acrylic
Colour/Finish	Matt Black
Style	Traditional
Fixings Included	No
Bath Panel Included	No
Displaced Capacity	115 Litre
Includes Grips	No
Leg Set Included	No
No. Of Tapholes	No Tapholes
Overflow Included	No
Tap Included	No
Waste Included	No

© ROXOR Group