Sales Code: BAYB109 **Barcode:** 5055275891766 **Brand:** Bayswater **Description:** Bayswater Bathurst 1800mm Double Ended Bath



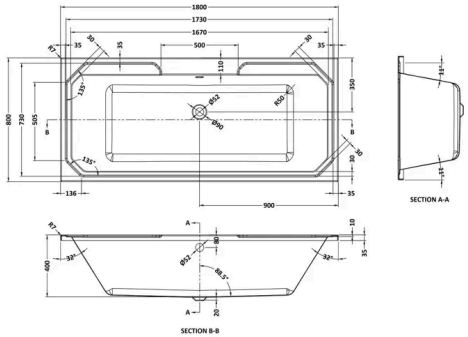

Product Dimensions

Product	400 x 800 x 1800mm (H x W x L)
Packaged	440 x 820 x 1850mm (H x W x D)
Nett Weight	22 kg
Packaged Weight	22 kg

Packaging Details

Box Qty	2
Label Size (mm)	50 x 100
Label Colour	White
Label Qty	2.0000

Product Details

Volume	215 Litre
Country of Origin	Poland
Product Material	Acrylic
Colour/Finish	White
Style	Traditional
Fixings Included	No
Bath Panel Included	No
Ce Certified	Yes
Displaced Capacity	145 Litre
Includes Grips	No
Leg Set Included	Yes
No. Of Tapholes	No Tapholes
Overflow Included	No
Tap Included	No
Ukca Certified	Yes
Waste Included	No

© ROXOR Group