Sales Code: BAYB106MB **Barcode:** 5056817794361 **Brand:** Bayswater **Description:** Bayswater Courtnell 1700mm Painted Matt Black Back To Wall Bath



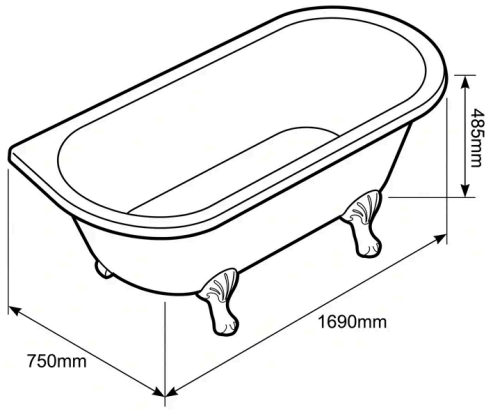

Product Dimensions

Product	485 x 750 x 1690mm (H x W x L)
Packaged	505 x 770 x 1720mm (H x W x D)
Nett Weight	40 kg
Packaged Weight	40 kg

Packaging Details

Label Size (mm)	50 x 100
Label Colour	White
Label Qty	2.0000

Product Details

Volume	228 Litre
Country of Origin	United Kingdom
Product Material	Acrylic
Colour/Finish	Matt Black
Style	Traditional
Fixings Included	No
Bath Panel Included	No
Displaced Capacity	158 Litre
Includes Grips	No
Leg Set Included	No
No. Of Tapholes	No Tapholes
Overflow Included	No
Tap Included	No
Waste Included	No

© ROXOR Group