Sales Code: BAYB102PG

Barcode: 5056817794248

Brand: Bayswater

Description: Bayswater Leinster 1700mm Painted Plummett Grey Freestanding Double Ended Bath



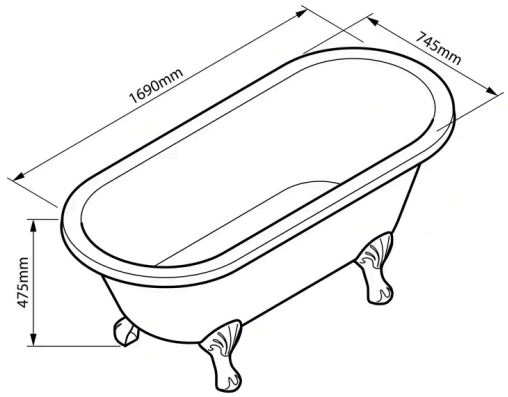

Product Dimensions

Product	475 x 745 x 1690mm (H x W x L)
Packaged	495 x 765 x 1710mm (H x W x D)
Nett Weight	43 kg
Packaged Weight	43 kg

Packaging Details

Label Size (mm)	50 x 100
Label Colour	White
Label Qty	2.0000

Product Details

Volume	200 Litre
Country of Origin	United Kingdom
Product Material	Acrylic
Colour/Finish	Plummett Grey
Style	Traditional
Fixings Included	No
Bath Panel Included	No
Displaced Capacity	130 Litre
Includes Grips	No
Leg Set Included	No
No. Of Tapholes	No Tapholes
Overflow Included	No
Tap Included	No
Waste Included	No

© ROXOR Group