Sales Code: BAYA828 **Barcode:** 5056678499313 **Brand:** Bayswater **Description:** Bayswater Oval Brushed Brass Basin Overflow Cover

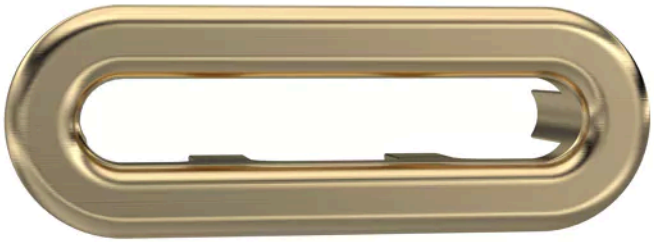

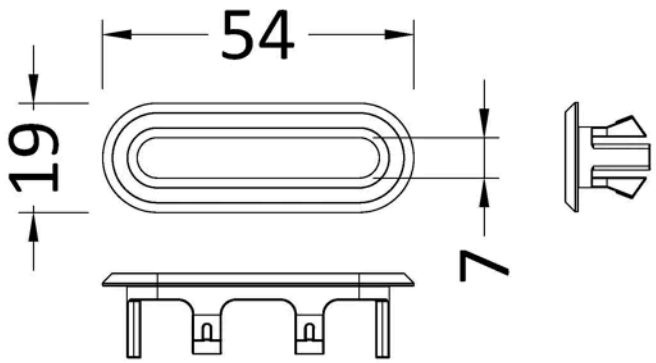

Product Dimensions

Product	26 x 50 x 10mm (H x W x D)
Packaged	30 x 30 x 30mm (H x W x D)
Nett Weight	0.2 kg
Packaged Weight	0.2 kg

Packaging Details

Box Qty	1

Product Details

Country of Origin	China
Product Material	Abs
Colour/Finish	Brushed Brass
Style	Contemporary
Fixings Included	Yes

© ROXOR Group