Sales Code: BAYA009 **Barcode:** 5055275890530 **Brand:** Bayswater **Description:** Bayswater Chrome Single Toilet Roll Holder



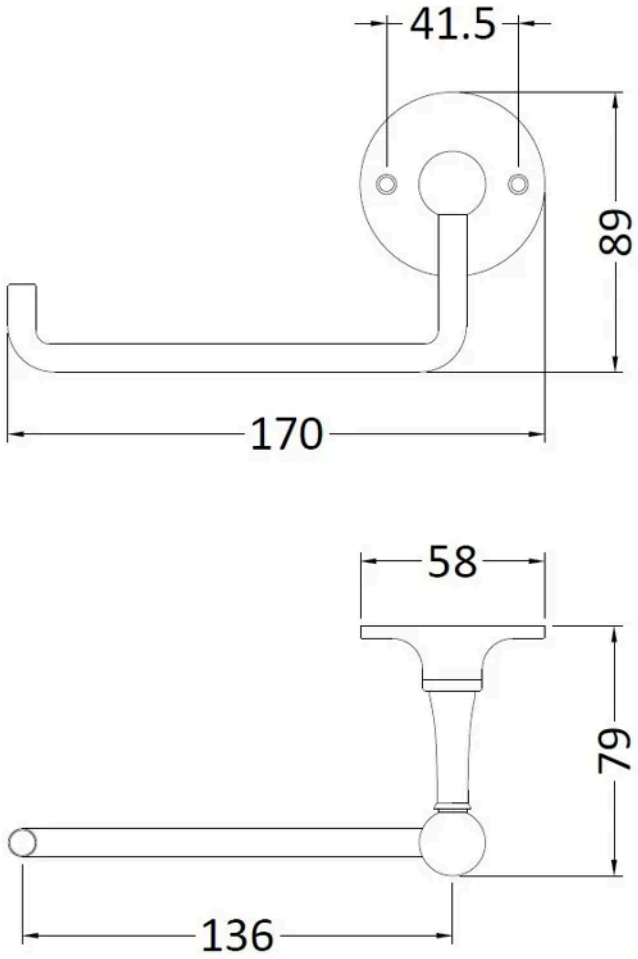

Product Dimensions

Product	93 x 170 x 79mm (H x W x D)
Packaged	95 x 110 x 190mm (H x W x D)
Nett Weight	0.25 kg
Packaged Weight	0.33 kg

Packaging Details

Box Qty	1
Label Size (mm)	50 x 100
Label Colour	White
Label Qty	2.0000

Product Details

Country of Origin	China
Product Material	Brass
Colour/Finish	Chrome
Style	Traditional
Fixings Included	Yes

© ROXOR Group