Sales Code: BAYA005 **Barcode:** 5055275890684 **Brand:** Bayswater **Description:** Bayswater Chrome Ceramic Cistern Lever



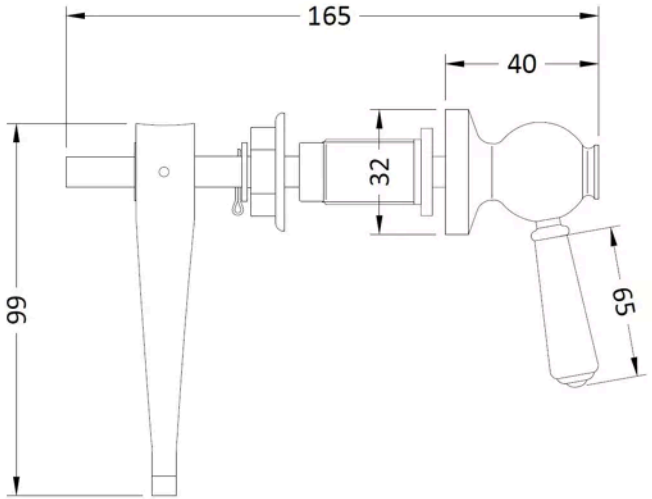

Product Dimensions

Product	167 x 32 x 100mm (H x W x D)
Packaged	30 x 110 x 180mm (H x W x D)
Nett Weight	0.2 kg
Packaged Weight	0.3 kg

Packaging Details

Box Qty	1
Label Size (mm)	50 x 100
Label Colour	White
Label Qty	2.0000

Product Details

Country of Origin	China
Product Material	Brass Ceramic
Colour/Finish	Chrome
Style	Traditional

© ROXOR Group