Sales Code: BAU017 **Barcode:** 5056462606149 **Brand:** BC Designs **Description:** BC Designs Fordham 1690mm Freestanding Bath With Legs



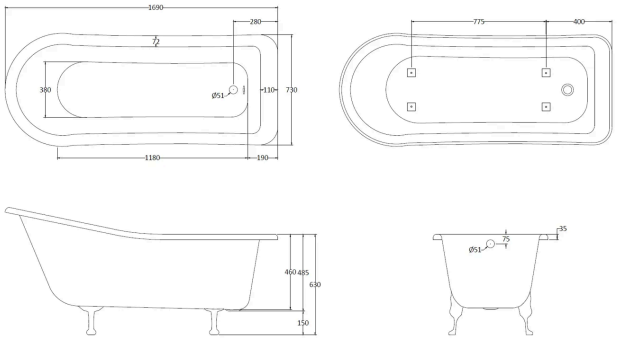

Product Dimensions

Product	770 x 740 x 1690mm (H x W x L)
Packaged	590 x 760 x 1700mm (H x W x D)
Nett Weight	50.5 kg
Packaged Weight	50.5 kg

Product Details

Volume	197 Litre
Country of Origin	China
Product Material	Acrylic
Colour/Finish	White
Style	Traditional
Fixings Included	No
Bath Panel Included	No
Ce Certified	No
Displaced Capacity	127 Litre
Includes Grips	No
Leg Set Included	Yes
No. Of Tapholes	No Tapholes
Overflow Included	Yes
Tap Included	No
Ukca Certified	No
Waste Included	No

© ROXOR Group

Sales Code: YBAU007 **Barcode:** 5056462606149 **Brand:** BC Designs **Description:** BC Designs Fordham 1690mm Freestanding Bath - No Legs



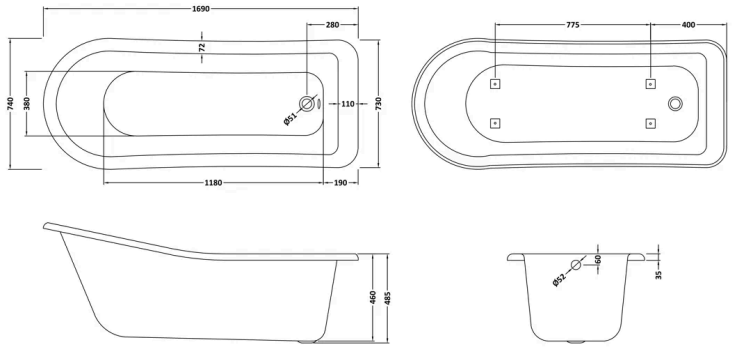

Product Dimensions

Product	770 x 740 x 1690mm (H x W x L)
Packaged	470 x 720 x 1700mm (H x W x D)
Nett Weight	46 kg
Packaged Weight	46 kg

Product Details

Volume	197 Litre
Country of Origin	China
Product Material	Acrylic
Colour/Finish	White
Style	Traditional
Fixings Included	No
Bath Panel Included	No
Ce Certified	Yes
Displaced Capacity	127 Litre
Includes Grips	No
Leg Set Included	No
No. Of Tapholes	No Tapholes
Overflow Included	Yes
Tap Included	No
Ukca Certified	No
Waste Included	No

© ROXOR Group

Sales Code: YBAU050 **Barcode:** 5056462687957 **Brand:** BC Designs **Description:** BC Designs Bath Feet Set 1 - 4 pack - Polished Chrome



Technical Drawing Not Available

Product Dimensions

Product	169 x 193 x 85mm (H x W x D)
Packaged	250 x 500 x 500mm (H x W x D)
Nett Weight	4.2 kg
Packaged Weight	4.5 kg

Product Details

Country of Origin	China
Product Material	Aluminium
Colour/Finish	Chrome
Style	Traditional

© ROXOR Group