Sales Code: BAS770 **Barcode:** 5056462606064 **Brand:** BC Designs **Description:** BC Designs Aluminium 1800mm Freestanding Boat Bath



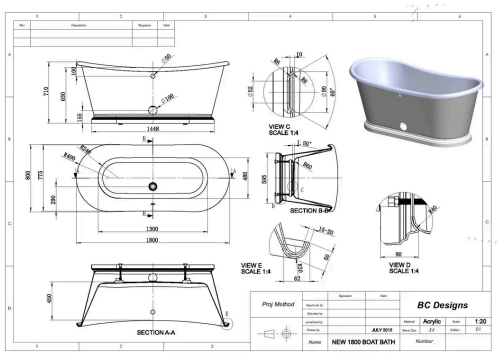

Product Dimensions

Product	1800 x 1800mm (D x L)
Packaged	1200 x 800 x 1960mm (H x W x D)
Nett Weight	76 kg
Packaged Weight	76 kg

Product Details

Volume	190 Litre
Country of Origin	Hong Kong
Product Material	Acrylic
Colour/Finish	White
Style	Traditional
Fixings Included	No
Bath Panel Included	No
Ce Certified	No
Displaced Capacity	220 Litre
Includes Grips	No
Leg Set Included	No
No. Of Tapholes	No Tapholes
Overflow Included	No
Tap Included	No
Ukca Certified	No
Waste Included	No

© ROXOR Group

Sales Code: BAS070 **Barcode:** 5056462606033 **Brand:** BC Designs **Description:** BC Designs Acrylic 1800mm Freestanding Boat Bath



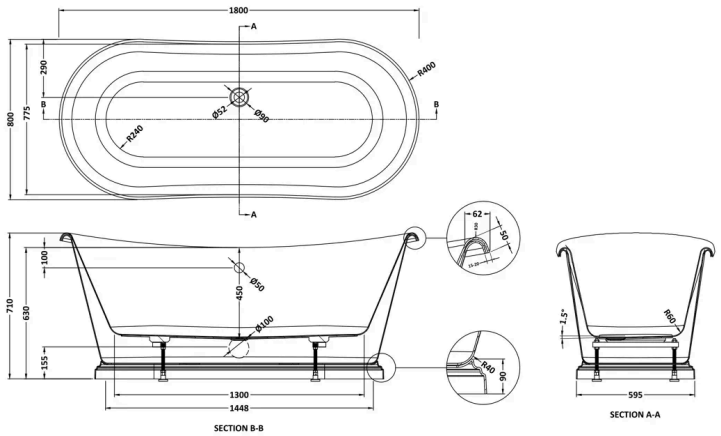

Product Dimensions

Product	710 x 800 x 1800mm (H x W x L)
Packaged	750 x 830 x 1830mm (H x W x D)
Nett Weight	46 kg
Packaged Weight	66 kg

Product Details

Volume	190 Litre
Country of Origin	Hong Kong
Product Material	Acrylic
Colour/Finish	White
Style	Traditional
Fixings Included	No
Bath Panel Included	No
Ce Certified	No
Displaced Capacity	220 Litre
Includes Grips	No
Leg Set Included	No
No. Of Tapholes	No Tapholes
Overflow Included	Yes
Tap Included	No
Ukca Certified	No
Waste Included	No

© ROXOR Group