Sales Code: BAS065-S180 **Barcode:** 5056462688046 **Brand:** BC Designs **Description:** BC Designs Sanded 1700mm Freestanding Boat Bath



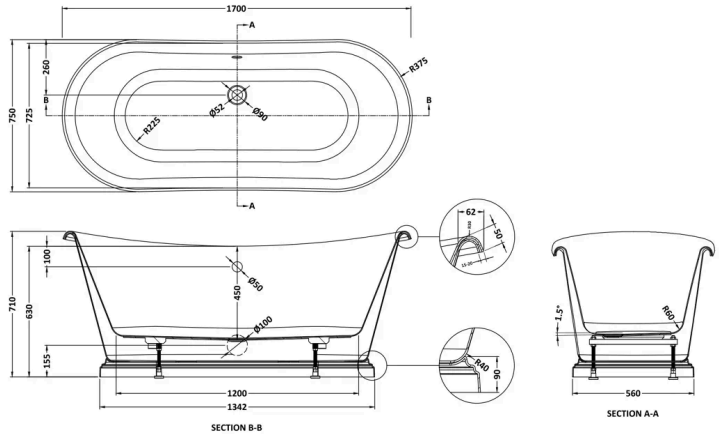

Product Dimensions

Product	710 x 750 x 1700mm (H x W x L)
Packaged	750 x 780 x 1730mm (H x W x D)
Nett Weight	42 kg
Packaged Weight	62 kg

Product Details

Volume	180 Litre
Country of Origin	Hong Kong
Product Material	Acrylic
Colour/Finish	White
Style	Traditional
Fixings Included	No
Bath Panel Included	No
Ce Certified	No
Displaced Capacity	190 Litre
Includes Grips	No
Leg Set Included	No
No. Of Tapholes	No Tapholes
Overflow Included	Yes
Tap Included	No
Ukca Certified	No
Waste Included	No

© ROXOR Group