**Sales Code:** BAS063-S180 **Barcode:** 5056462688039 **Brand:** BC Designs **Description:** BC Designs Sanded 1580mm Freestanding Boat Bath



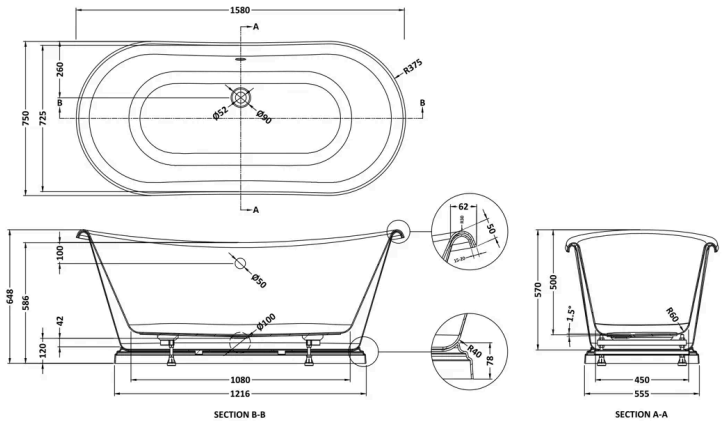


## Product Dimensions

| | |
|---|---|
| Product | 646 x 750 x 1580mm (H x W x L) |
| Packaged | 690 x 780 x 1610mm (H x W x D) |
| Nett Weight | 36 kg |
| Packaged Weight | 56 kg |

## Product Details

| | |
|---|---|
| Volume | 180 Litre |
| Country of Origin | Hong Kong |
| Product Material | Acrylic |
| Colour/Finish | White |
| Style | Traditional |
| Fixings Included | No |
| Bath Panel Included | No |
| Ce Certified | No |
| Displaced Capacity | 110 Litre |
| Includes Grips | No |
| Leg Set Included | No |
| No. Of Tapholes | No Tapholes |
| Overflow Included | Yes |
| Tap Included | No |
| Ukca Certified | No |
| Waste Included | No |

© ROXOR Group