Sales Code: BAS035 **Barcode:** 5056462608198 **Brand:** BC Designs **Description:** BC Designs Slipp 1590mm Freestanding Bath With Waste



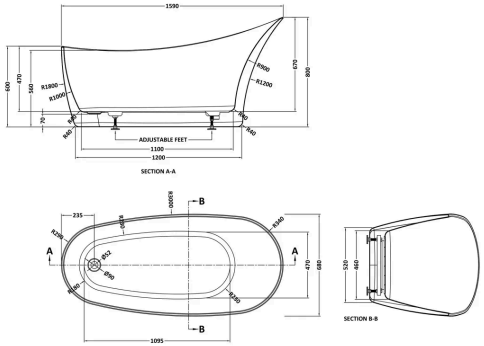

Product Dimensions

Product	800 x 675 x 1590mm (H x W x L)
Packaged	840 x 720 x 1620mm (H x W x D)
Nett Weight	56.35 kg
Packaged Weight	56.35 kg

Product Details

Volume	195 Litre
Country of Origin	Hong Kong
Product Material	Acrylic
Colour/Finish	White
Style	Contemporary
Fixings Included	No
Bath Panel Included	No
Ce Certified	No
Displaced Capacity	195 Litre
Includes Grips	No
Leg Set Included	No
No. Of Tapholes	No Tapholes
Overflow Included	No
Tap Included	No
Ukca Certified	No
Waste Included	Yes

© ROXOR Group

Sales Code: BAS035NW **Barcode:** 5056462608198 **Brand:** BC Designs **Description:** Slipp 1590 x 680 Bath (No Waste)

Product Image Not Available

Technical Drawing Not Available

Product Dimensions

Packaged	840 x 720 x 1620mm (H x W x D)
Nett Weight	36 kg
Packaged Weight	56 kg

© ROXOR Group

Sales Code: WAS110 **Barcode:** 5056462609232 **Brand:** BC Designs **Description:** BC Designs Chrome 60mm Push Button Unslotted Bath Waste



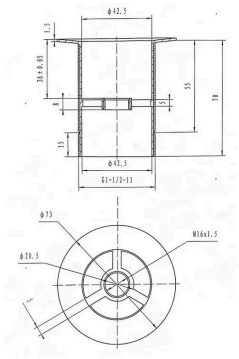

Product Dimensions

Packaged	75 x 75 x 105mm (H x W x D)
Nett Weight	0.35 kg
Packaged Weight	0.35 kg

Product Details

Country of Origin	United Kingdom
Product Material	Brass
Waste Type	Push Button
Colour/Finish	Chrome
Style	Contemporary
Waste Shape	Round

© ROXOR Group