Sales Code: BAS019 **Barcode:** 5056462608167 **Brand:** BC Designs **Description:** BC Designs Ovali 1690mm Freestanding Bath With Waste



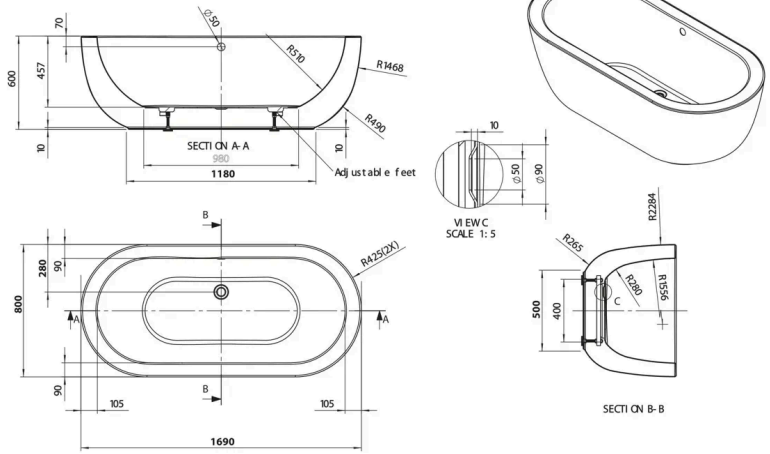

Product Dimensions

Product	600 x 800 x 1690mm (H x W x L)
Packaged	650 x 830 x 1740mm (H x W x D)
Nett Weight	43.5 kg
Packaged Weight	44 kg

Packaging Details

Box Qty	1

Product Details

Volume	238 Litre
Country of Origin	Hong Kong
Product Material	Acrylic
Colour/Finish	White
Style	Contemporary
Fixings Included	No
Bath Panel Included	No
Ce Certified	No
Displaced Capacity	238 Litre
Includes Grips	No
Leg Set Included	No
No. Of Tapholes	No Tapholes
Overflow Included	Yes
Tap Included	No
Ukca Certified	No
Waste Included	Yes

© ROXOR Group