Sales Code: BAS016 **Barcode:** 5056462608235 **Brand:** BC Designs **Description:** BC Designs Chalice 1650mm Freestanding Bath With Waste



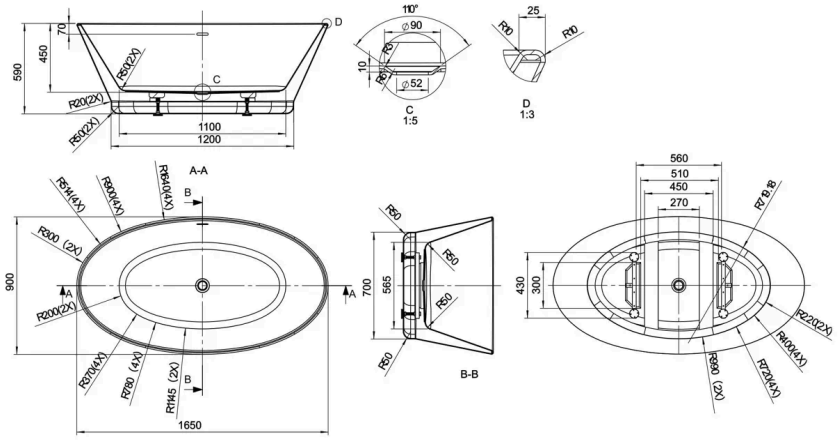

Product Dimensions

Product	590 x 900 x 1650mm (H x W x L)
Packaged	640 x 930 x 1690mm (H x W x D)
Nett Weight	43 kg
Packaged Weight	63 kg

Packaging Details

Box Qty	1

Product Details

Volume	240 Litre
Country of Origin	Hong Kong
Product Material	Acrylic
Colour/Finish	White
Style	Contemporary
Fixings Included	No
Bath Panel Included	No
Ce Certified	No
Displaced Capacity	240 Litre
Includes Grips	No
Leg Set Included	No
No. Of Tapholes	No Tapholes
Overflow Included	Yes
Tap Included	No
Ukca Certified	No
Waste Included	Yes

© ROXOR Group