Sales Code: BAS015 **Barcode:** 5056462608228 **Brand:** BC Designs **Description:** BC Designs Chalice 1780mm Freestanding Bath With Waste



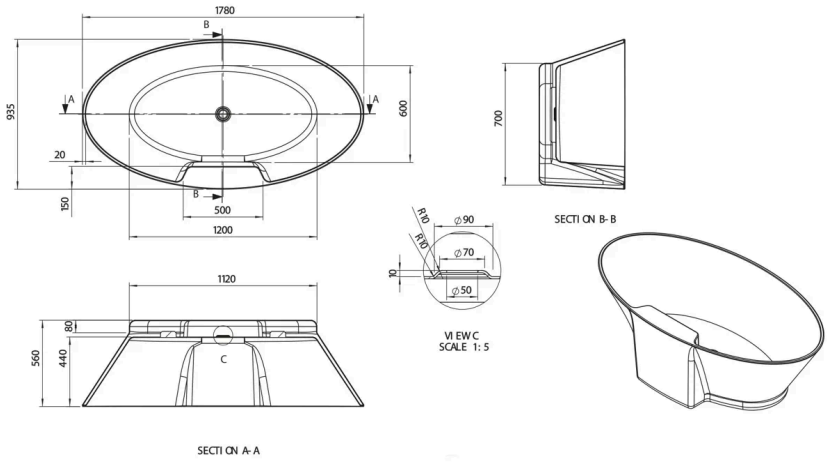

Product Dimensions

Product	560 x 935 x 1780mm (H x W x L)
Packaged	610 x 980 x 1820mm (H x W x D)
Nett Weight	37 kg
Packaged Weight	57 kg

Packaging Details

Box Qty	1

Product Details

Volume	270 Litre
Country of Origin	Hong Kong
Product Material	Acrylic
Colour/Finish	White
Style	Contemporary
Fixings Included	No
Bath Panel Included	No
Ce Certified	No
Displaced Capacity	270 Litre
Includes Grips	No
Leg Set Included	No
No. Of Tapholes	No Tapholes
Overflow Included	Yes
Tap Included	No
Ukca Certified	No
Waste Included	Yes

© ROXOR Group