Sales Code: BAS001 **Barcode:** 5056462608112 **Brand:** BC Designs **Description:** BC Designs Tamorina 1600mm Freestanding Bath



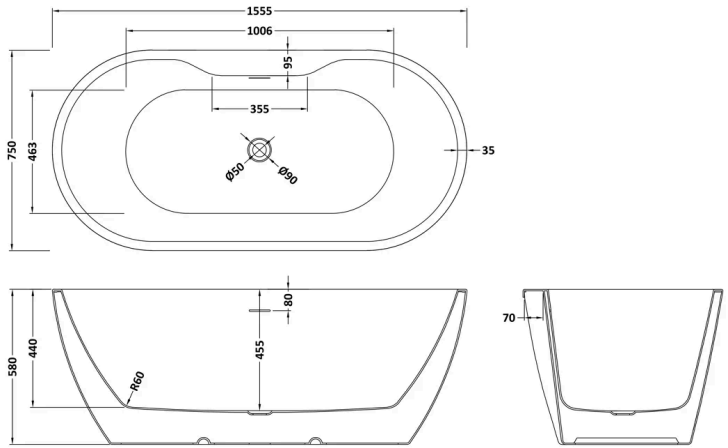

Product Dimensions

Product	600 x 800 x 1600mm (H x W x L)
Packaged	660 x 840 x 1640mm (H x W x D)
Nett Weight	43.5 kg
Packaged Weight	44 kg

Packaging Details

Box Qty	1

Product Details

Volume	240 Litre
Country of Origin	Hong Kong
Product Material	Acrylic
Colour/Finish	White
Style	Contemporary
Fixings Included	No
Bath Panel Included	No
Ce Certified	No
Displaced Capacity	170 Litre
Includes Grips	No
Leg Set Included	No
No. Of Tapholes	No Tapholes
Overflow Included	Yes
Tap Included	No
Ukca Certified	No
Waste Included	No

© ROXOR Group