Sales Code: BAR004 **Barcode:** 5056817746117 **Brand:** nuie Choice **Description:** nuie choice Baron 590mm Traditional 2 Tap Hole Basin & Pedestal



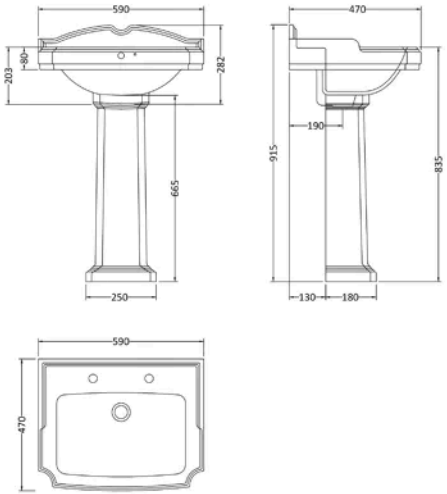

Product Dimensions

Product	915 x 590 x 470mm (H x W x D)
Packaged	550 x 550 x 550mm (H x W x D)
Nett Weight	30.2 kg
Packaged Weight	30.2 kg

Product Details

Country of Origin	China
Product Material	Vitreous China
Colour/Finish	White
Mount Type	Floor,Pedestal
Style	Traditional
Fixings Included	No
Ce Certified	Yes
Inner Bowl Depth	290 mm
Inner Bowl Height	165 mm
Inner Bowl Width	590 mm
No. Of Tapholes	2
Number Of Bowls	1
Overflow Cover Included	Yes
Overflow Included	Yes
Tap Included	No
Waste Included	No

© ROXOR Group

Sales Code: NCS403 **Barcode:** 5055369026579 **Brand:** nuie **Description:** nuie Legend Traditional Full Pedestal



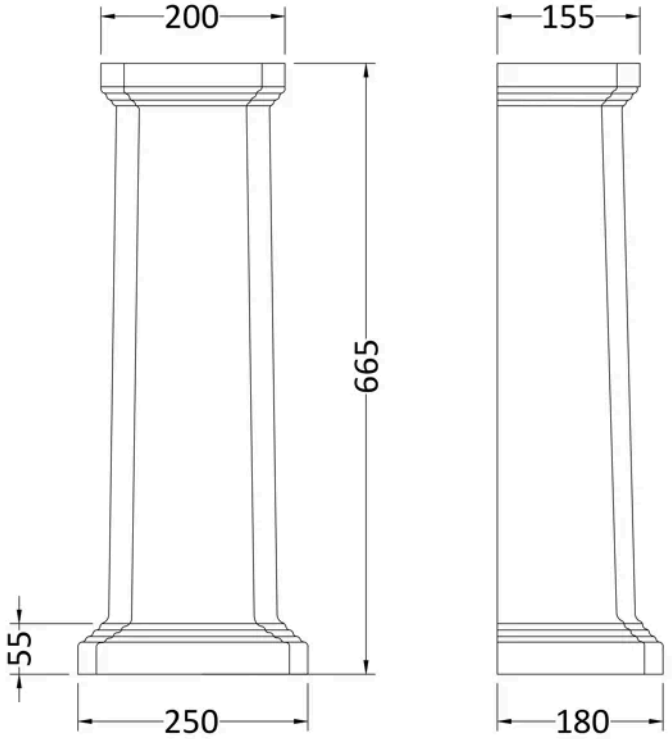

Product Dimensions

Product	690 x 260 x 160mm (H x W x D)
Packaged	700 x 270 x 200mm (H x W x D)
Nett Weight	10.56 kg
Packaged Weight	11 kg

Product Details

Country of Origin	China
Product Material	Vitreous China
Colour/Finish	White
Ce Certified	Yes

© ROXOR Group

Sales Code: NCS422 **Barcode:** 5055369026586 **Brand:** nuie **Description:** nuie Legend 2 Tap Hole 590mm Ceramic Basin



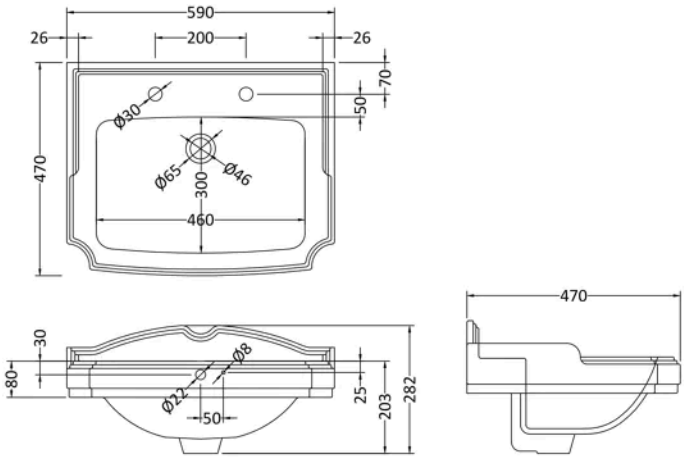

Product Dimensions

Product	280 x 590 x 470mm (H x W x D)
Packaged	290 x 510 x 590mm (H x W x D)
Nett Weight	18.54 kg
Packaged Weight	19.2 kg

Product Details

Country of Origin	China
Product Material	Vitreous China
Colour/Finish	White
Ce Certified	Yes
Inner Bowl Height	165 mm
No. Of Tapholes	2
Number Of Bowls	1

© ROXOR Group