Sales Code: BAC055 **Barcode:** 5056462605944 **Brand:** BC Designs **Description:** BC Designs 550mm Copper Nickel Oval Vessel Basin



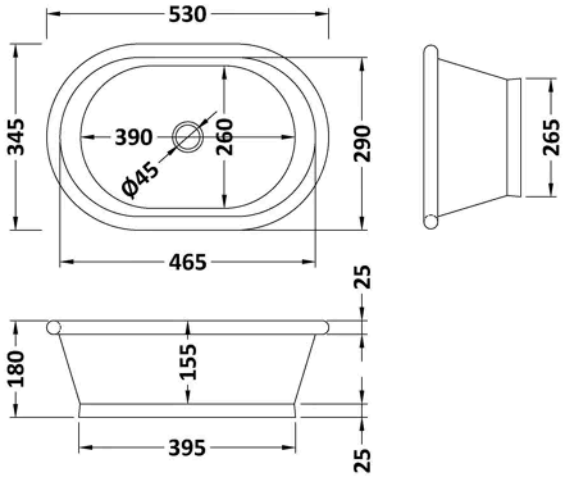

Product Dimensions

Product	180 x 530 x 345mm (H x W x D)
Packaged	240 x 440 x 600mm (H x W x D)
Nett Weight	3.35 kg
Packaged Weight	5.48 kg

Packaging Details

Box Qty	1

Product Details

Country of Origin	India
Product Material	Copper
Colour/Finish	Copper Nickel
Style	Contemporary
Inner Bowl Height	155 mm
No. Of Tapholes	No Tapholes
Number Of Bowls	1
Overflow Included	No
Tap Included	No
Waste Included	No

© ROXOR Group