**Sales Code:** BAC054 **Barcode:** 5056462661735 **Brand:** BC Designs **Description:** BC Designs 550mm Copper Patinata Oval Vessel Basin



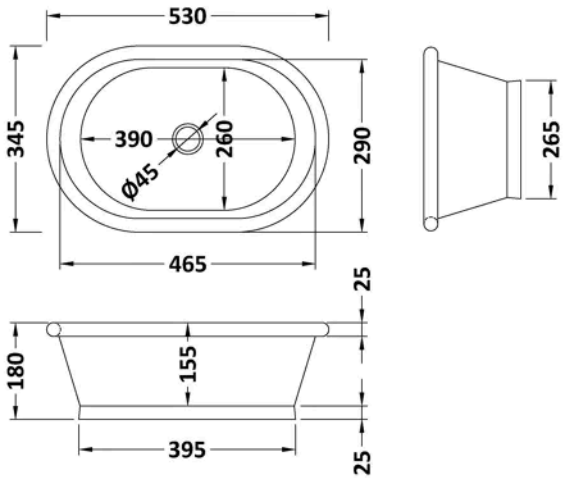


## Product Dimensions

| | |
|---|---|
| Product | 180 x 530 x 345mm (H x W x D) |
| Packaged | 240 x 440 x 600mm (H x W x D) |
| Nett Weight | 3.35 kg |
| Packaged Weight | 5.48 kg |

## Packaging Details

| | |
|---|---|
| Box Qty | 1 |

## Product Details

| | |
|---|---|
| Country of Origin | India |
| Product Material | Copper |
| Colour/Finish | Copper Patinata |
| Style | Contemporary |
| Inner Bowl Height | 155 mm |
| No. Of Tapholes | No Tapholes |
| Number Of Bowls | 1 |
| Overflow Included | No |
| Tap Included | No |
| Waste Included | No |

© ROXOR Group