**Sales Code:** BAB160F **Barcode:** 5056462692388 **Brand:** BC Designs **Description:** BC Designs Omnia 360mm Light Fawn Oval Vessel Basin



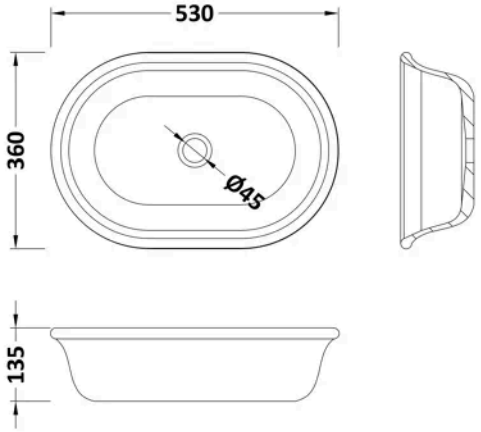


## Product Dimensions

| | |
|---|---|
| Product | 135 x 530 x 360mm (H x W x D) |
| Packaged | 135 x 360 x 530mm (H x W x D) |
| Nett Weight | 10 kg |
| Packaged Weight | 10 kg |

## Packaging Details

| | |
|---|---|
| Box Qty | 1 |

## Product Details

| | |
|---|---|
| Country of Origin | South Africa |
| Product Material | Solid Surface |
| Colour/Finish | Light Fawn |
| Style | Contemporary |
| Inner Bowl Height | 115 mm |
| No. Of Tapholes | No Tapholes |
| Number Of Bowls | 1 |
| Overflow Included | No |
| Tap Included | No |
| Waste Included | No |

© ROXOR Group