Sales Code: BAB160AB **Barcode:** 5056883740293 **Brand:** BC Designs **Description:** BC Designs Omnia 360mm Aqua Blue Oval Vessel Basin



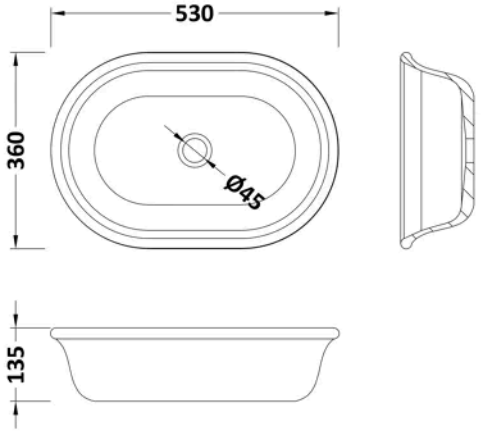

Product Dimensions

Product	135 x 530 x 360mm (H x W x D)
Packaged	135 x 360 x 530mm (H x W x D)
Nett Weight	10 kg
Packaged Weight	10 kg

Packaging Details

Box Qty	1

Product Details

Country of Origin	South Africa
Product Material	Solid Surface
Colour/Finish	Aqua Blue
Style	Contemporary
Inner Bowl Height	115 mm
No. Of Tapholes	No Tapholes
Number Of Bowls	1
Overflow Included	No
Tap Included	No
Waste Included	No

© ROXOR Group