Sales Code: BAB130MW **Barcode:** 5056678402993 **Brand:** BC Designs **Description:** BC Designs Bampton 535mm Matt White Oval Vessel Basin



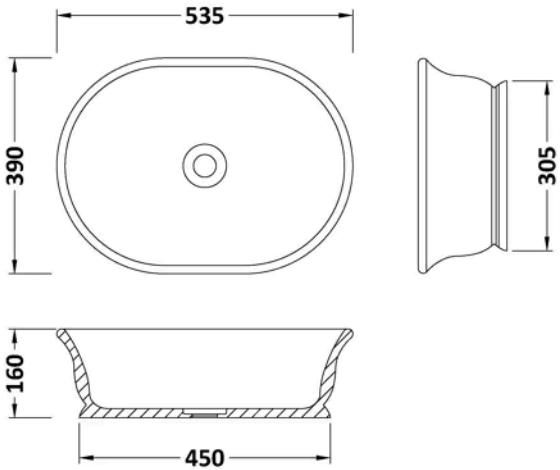

Product Dimensions

Product	160 x 535 x 390mm (H x W x D)
Packaged	180 x 420 x 550mm (H x W x D)
Nett Weight	11 kg
Packaged Weight	11 kg

Product Details

Country of Origin	South Africa
Product Material	Solid Surface
Colour/Finish	Matt White
Style	Contemporary
No. Of Tapholes	No Tapholes
Number Of Bowls	1

© ROXOR Group