Sales Code: BAB130MG **Barcode:** 5056883740545 **Brand:** BC Designs **Description:** BC Designs Bampton 535mm Minty Green Oval Vessel Basin



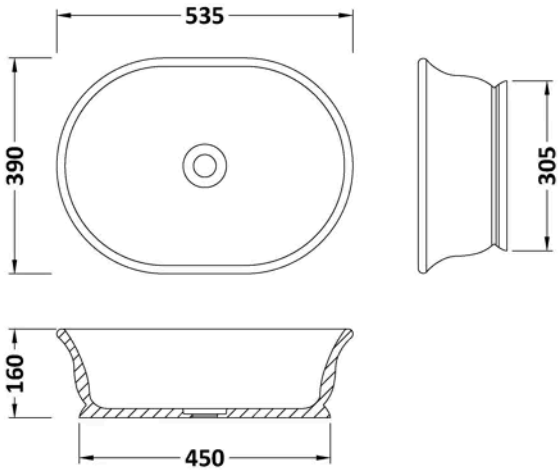

Product Dimensions

Product	160 x 535 x 390mm (H x W x D)
Packaged	180 x 420 x 550mm (H x W x D)
Nett Weight	11 kg
Packaged Weight	11 kg

Packaging Details

Box Qty	1

Product Details

Country of Origin	South Africa
Product Material	Solid Surface
Colour/Finish	Minty Green
Style	Contemporary
Inner Bowl Height	155 mm
No. Of Tapholes	No Tapholes
Number Of Bowls	1
Overflow Included	No
Tap Included	No
Waste Included	No

© ROXOR Group