Sales Code: BAB110MG **Barcode:** 5056883740521 **Brand:** BC Designs **Description:** BC Designs Gio 575mm Minty Green Oval Vessel Basin



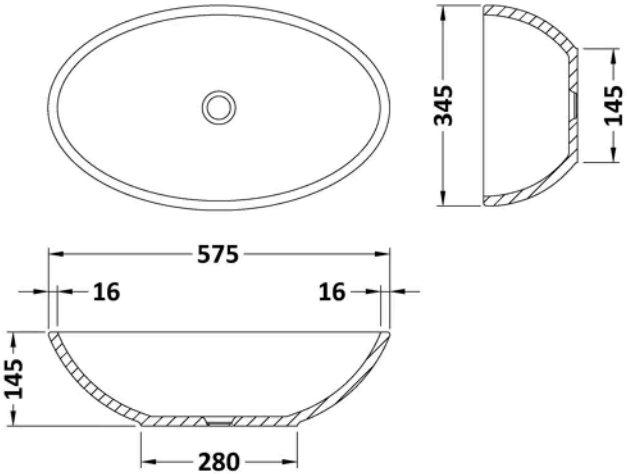

Product Dimensions

Product	145 x 575 x 345mm (H x W x D)
Packaged	170 x 450 x 560mm (H x W x D)
Nett Weight	9 kg
Packaged Weight	9 kg

Packaging Details

Box Qty	1

Product Details

Country of Origin	South Africa
Product Material	Solid Surface
Colour/Finish	Minty Green
Style	Contemporary
Inner Bowl Height	120 mm
No. Of Tapholes	No Tapholes
Number Of Bowls	1
Overflow Included	No
Tap Included	No
Waste Included	No

© ROXOR Group