Sales Code: BAB105RB **Barcode:** 5056883739976 **Brand:** BC Designs **Description:** BC Designs Kurv 615mm Rose Bloom Oval Vessel Basin

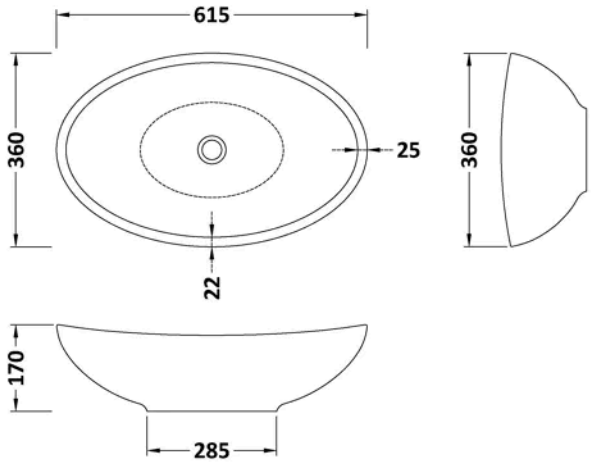

Product Dimensions

Product	170 x 615 x 360mm (H x W x D)
Packaged	180 x 370 x 620mm (H x W x D)
Nett Weight	10 kg
Packaged Weight	10 kg

Packaging Details

Box Qty	1

Product Details

Country of Origin	South Africa
Product Material	Solid Surface
Colour/Finish	Rose Bloom
Style	Contemporary
Inner Bowl Height	145 mm
No. Of Tapholes	No Tapholes
Number Of Bowls	1
Overflow Included	No
Tap Included	No
Waste Included	No

© ROXOR Group