Sales Code: BAB073RB **Barcode:** 5056883739921 **Brand:** BC Designs **Description:** BC Designs Sorpressa 1510mm Rose Bloom Freestanding Bath

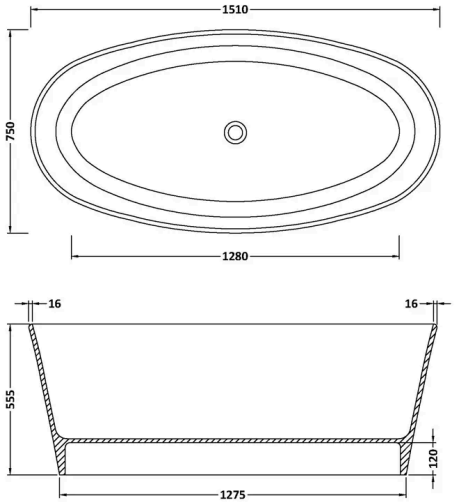

Product Dimensions

Product	555 x 750 x 1510mm (H x W x L)
Packaged	555 x 760 x 1510mm (H x W x D)
Nett Weight	73 kg
Packaged Weight	88 kg

Packaging Details

Box Qty	1

Product Details

Volume	170 Litre
Country of Origin	South Africa
Product Material	Cian Solid Surface
Colour/Finish	Rose Bloom
Style	Contemporary
Fixings Included	No
Bath Panel Included	No
Ce Certified	No
Declaration Of Performance	No
Displaced Capacity	100 Litre
Includes Grips	No
Leg Set Included	No
No. Of Tapholes	No Tapholes
Overflow Included	No
Tap Included	No
Ukca Certified	No
Waste Included	No

© ROXOR Group