**Sales Code:** BAB073PG **Barcode:** 5056462608105 **Brand:** BC Designs **Description:** BC Designs Sorpressa 1510mm Powder Grey Freestanding Bath



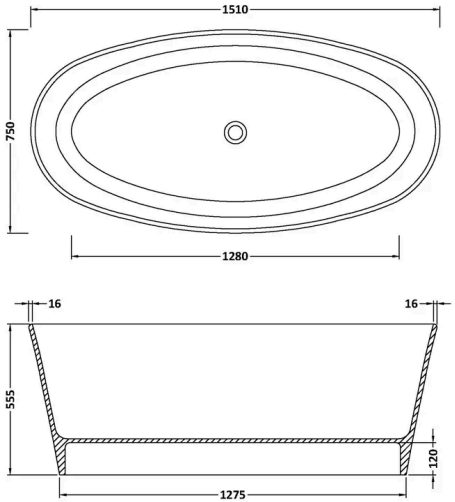


## Product Dimensions

| | |
|---|---|
| Product | 555 x 750 x 1510mm (H x W x L) |
| Packaged | 555 x 760 x 1510mm (H x W x D) |
| Nett Weight | 73 kg |
| Packaged Weight | 88 kg |

## Packaging Details

| | |
|---|---|
| Box Qty | 1 |

## Product Details

| | |
|---|---|
| Volume | 170 Litre |
| Country of Origin | South Africa |
| Product Material | Cian Solid Surface |
| Colour/Finish | Powder Grey |
| Style | Contemporary |
| Fixings Included | No |
| Bath Panel Included | No |
| Ce Certified | No |
| Declaration Of Performance | No |
| Displaced Capacity | 100 Litre |
| Includes Grips | No |
| Leg Set Included | No |
| No. Of Tapholes | No Tapholes |
| Overflow Included | No |
| Tap Included | No |
| Ukca Certified | No |
| Waste Included | No |

© ROXOR Group