**Sales Code:** BAB062F **Barcode:** 5056462607559 **Brand:** BC Designs **Description:** BC Designs Gio 1645mm Light Fawn Freestanding Bath



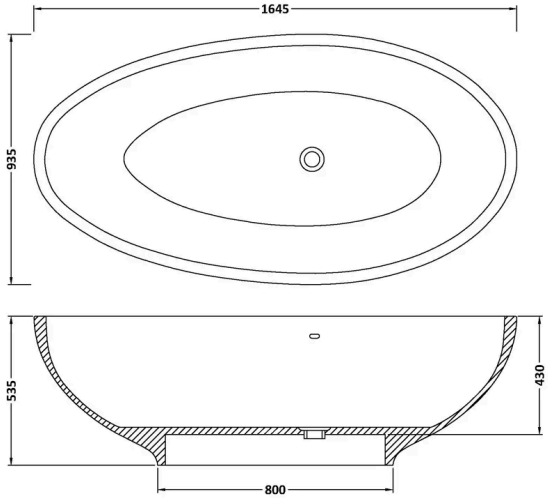


## Product Dimensions

| | |
|---|---|
| Product | 535 x 935 x 1645mm (H x W x L) |
| Packaged | 535 x 935 x 1645mm (H x W x D) |
| Nett Weight | 100 kg |
| Packaged Weight | 115 kg |

## Packaging Details

| | |
|---|---|
| Box Qty | 1 |

## Product Details

| | |
|---|---|
| Volume | 160 Litre |
| Country of Origin | South Africa |
| Product Material | Cian Solid Surface |
| Colour/Finish | Light Fawn |
| Style | Contemporary |
| Fixings Included | No |
| Bath Panel Included | No |
| Ce Certified | No |
| Declaration Of Performance | No |
| Displaced Capacity | 90 Litre |
| Includes Grips | No |
| Leg Set Included | No |
| No. Of Tapholes | No Tapholes |
| Overflow Included | Yes |
| Tap Included | No |
| Ukca Certified | No |
| Waste Included | No |

© ROXOR Group