Sales Code: BAB062AB **Barcode:** 5056883740163 **Brand:** BC Designs **Description:** BC Designs Gio 1645mm Aqua Blue Freestanding Bath



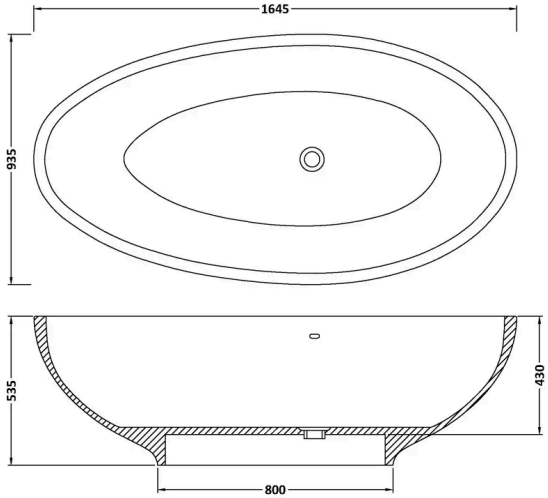

Product Dimensions

Product	535 x 935 x 1645mm (H x W x L)
Packaged	535 x 935 x 1645mm (H x W x D)
Nett Weight	100 kg
Packaged Weight	115 kg

Packaging Details

Box Qty	1

Product Details

Volume	160 Litre
Country of Origin	South Africa
Product Material	Cian Solid Surface
Colour/Finish	Aqua Blue
Style	Contemporary
Fixings Included	No
Bath Panel Included	No
Ce Certified	No
Declaration Of Performance	No
Displaced Capacity	90 Litre
Includes Grips	No
Leg Set Included	No
No. Of Tapholes	No Tapholes
Overflow Included	Yes
Tap Included	No
Ukca Certified	No
Waste Included	No

© ROXOR Group