Sales Code: BAB061PP **Barcode:** 5056883740880 **Brand:** BC Designs **Description:** BC Designs Highcroft 1700 x 861mm Pale Peach Oval Bath



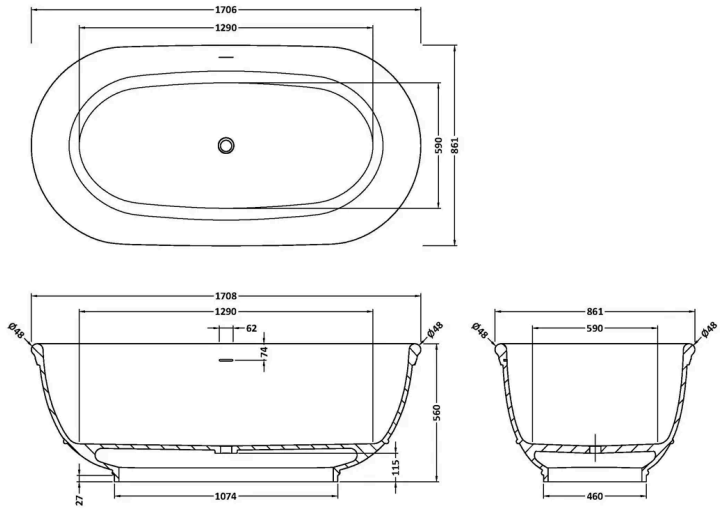

Product Dimensions

Product	560 x 861 x 1706mm (H x W x L)
Packaged	616 x 895 x 1745mm (H x W x D)
Nett Weight	120 kg
Packaged Weight	120 kg

Packaging Details

Box Qty	1

Product Details

Volume	180 Litre
Country of Origin	South Africa
Product Material	Cian Solid Surface
Colour/Finish	Pale Peach
Style	Traditional
Bath Panel Included	No
Includes Grips	No
Leg Set Included	No
No. Of Tapholes	No Tapholes
Overflow Included	Yes
Tap Included	No
Waste Included	No

© ROXOR Group