Sales Code: BAB060IG **Barcode:** 5056883743751 **Brand:** BC Designs **Description:** BC Designs Cavendish 1650 x 780mm Industrial Grey Oval Bath



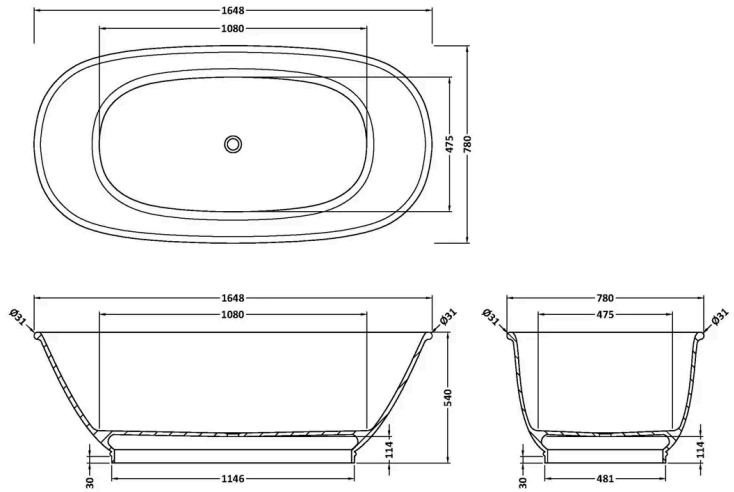

Product Dimensions

Product	540 x 780 x 1648mm (H x W x L)
Packaged	640 x 850 x 1800mm (H x W x D)
Nett Weight	120 kg
Packaged Weight	120 kg

Packaging Details

Box Qty	1

Product Details

Volume	180 Litre
Country of Origin	South Africa
Product Material	Cian Solid Surface
Colour/Finish	Industrial Grey
Style	Traditional
Bath Panel Included	No
Includes Grips	No
Leg Set Included	No
No. Of Tapholes	No Tapholes
Overflow Included	No
Tap Included	No
Waste Included	No

© ROXOR Group