Sales Code: BAB060 **Barcode:** 5056883702680 **Brand:** BC Designs **Description:** BC Designs Cavendish 1650 x 780mm Oval Bath



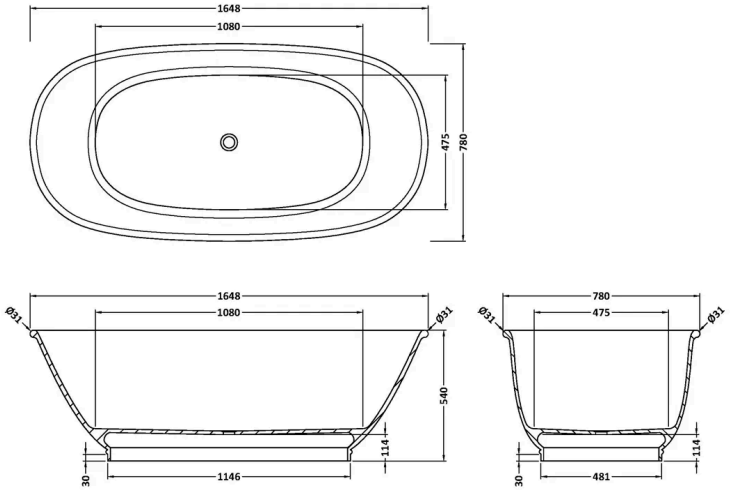

Product Dimensions

Product	540 x 780 x 1648mm (H x W x L)
Packaged	640 x 850 x 1800mm (H x W x D)
Nett Weight	120 kg
Packaged Weight	120 kg

Packaging Details

Box Qty	1

Product Details

Volume	180 Litre
Country of Origin	South Africa
Product Material	Cian Solid Surface
Colour/Finish	Polished White
Style	Traditional
Bath Panel Included	No
Displaced Capacity	112 Litre
Includes Grips	No
Leg Set Included	No
No. Of Tapholes	No Tapholes
Overflow Included	No
Tap Included	No
Waste Included	No

© ROXOR Group