Sales Code: BAB055IG **Barcode:** 5056462605166 **Brand:** BC Designs **Description:** BC Designs Verdicio 1680mm Industrial Grey Freestanding Bath



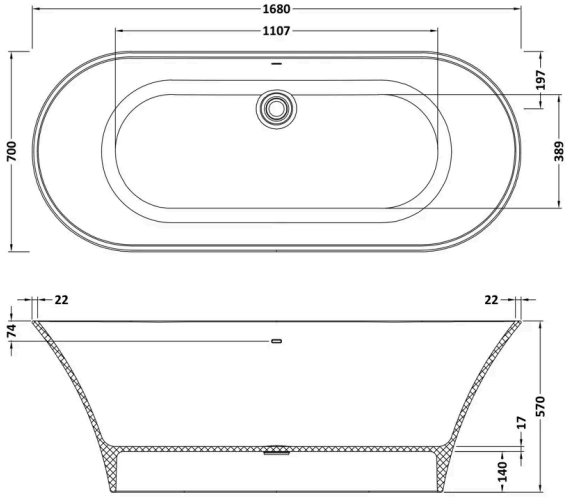

Product Dimensions

Product	570 x 700 x 1680mm (H x W x L)
Packaged	570 x 700 x 1680mm (H x W x D)
Nett Weight	88 kg
Packaged Weight	103 kg

Packaging Details

Box Qty	1

Product Details

Volume	180 Litre
Country of Origin	South Africa
Product Material	Cian Solid Surface
Colour/Finish	Industrial Grey
Style	Contemporary
Fixings Included	No
Bath Panel Included	No
Ce Certified	No
Declaration Of Performance	No
Displaced Capacity	110 Litre
Includes Grips	No
Leg Set Included	No
No. Of Tapholes	No Tapholes
Overflow Included	Yes
Tap Included	No
Ukca Certified	No
Waste Included	No

© ROXOR Group