Sales Code: BAB047F **Barcode:** 5056462662497 **Brand:** BC Designs **Description:** BC Designs Senator Light Fawn Bun Feet



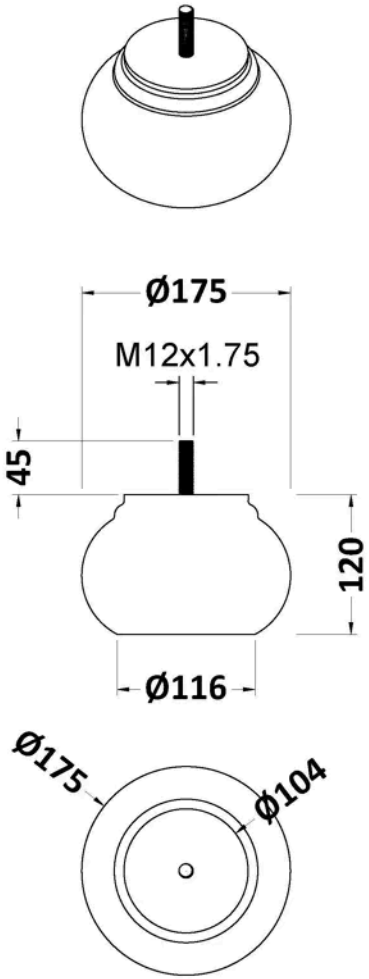

Product Dimensions

Packaged	250 x 500 x 500mm (H x W x D)
Nett Weight	3.95 kg
Packaged Weight	3.95 kg

Packaging Details

Box Qty	1

Product Details

Country of Origin	South Africa
Product Material	Cian Solid Surface
Colour/Finish	Light Fawn
Style	Contemporary

© ROXOR Group