**Sales Code:** BAB025AB **Barcode:** 5056883740088 **Brand:** BC Designs **Description:** BC Designs Magnus 1680mm Aqua Blue Freestanding Bath



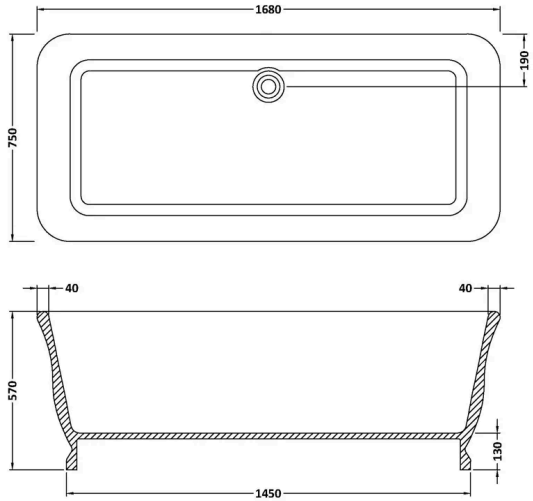


## Product Dimensions

| | |
|---|---|
| Product | 570 x 750 x 1680mm (H x W x L) |
| Packaged | 570 x 750 x 1680mm (H x W x D) |
| Nett Weight | 120 kg |
| Packaged Weight | 135 kg |

## Packaging Details

| | |
|---|---|
| Box Qty | 1 |

## Product Details

| | |
|---|---|
| Volume | 180 Litre |
| Country of Origin | South Africa |
| Product Material | Cian Solid Surface |
| Colour/Finish | Aqua Blue |
| Style | Contemporary |
| Fixings Included | No |
| Bath Panel Included | No |
| Ce Certified | No |
| Declaration Of Performance | No |
| Displaced Capacity | 110 Litre |
| Includes Grips | No |
| Leg Set Included | No |
| No. Of Tapholes | No Tapholes |
| Overflow Included | Yes |
| Tap Included | No |
| Ukca Certified | No |
| Waste Included | No |

© ROXOR Group