Sales Code: BAB020AB **Barcode:** 5056883740071 **Brand:** BC Designs **Description:** BC Designs Delicata 1520mm Aqua Blue Freestanding Bath



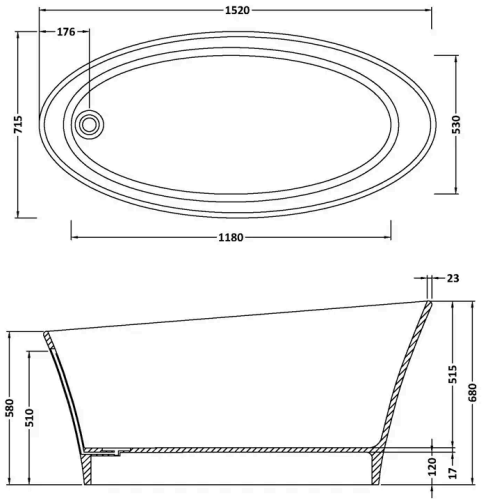

Product Dimensions

Product	680 x 715 x 1520mm (H x W x L)
Packaged	680 x 715 x 1520mm (H x W x D)
Nett Weight	86 kg
Packaged Weight	101 kg

Packaging Details

Box Qty	1

Product Details

Volume	190 Litre
Country of Origin	South Africa
Product Material	Cian Solid Surface
Colour/Finish	Aqua Blue
Style	Contemporary
Fixings Included	No
Bath Panel Included	No
Ce Certified	No
Declaration Of Performance	No
Displaced Capacity	120 Litre
Includes Grips	No
Leg Set Included	No
No. Of Tapholes	No Tapholes
Overflow Included	No
Tap Included	No
Ukca Certified	No
Waste Included	No

© ROXOR Group