Sales Code: BAB007 **Barcode:** 5056462607078 **Brand:** BC Designs **Description:** BC Designs Kurv Matt White Bath Plinth



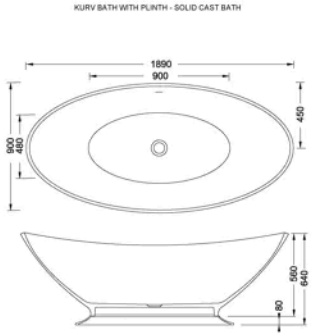

Product Dimensions

Product	80 x 500 x 1110mm (H x W x D)
Packaged	80 x 518 x 970mm (H x W x D)
Nett Weight	81 kg
Packaged Weight	96 kg

Packaging Details

Box Qty	1

Product Details

Country of Origin	South Africa
Product Material	Plastic
Colour/Finish	Matt White
Style	Contemporary

© ROXOR Group