Sales Code: ATH073A69 **Barcode:** 5056462637563 **Brand:** nuie **Description:** nuie Athena 500mm Gloss Grey 1 Drawer Wall Hung Cabinet With Mid Edge Basin



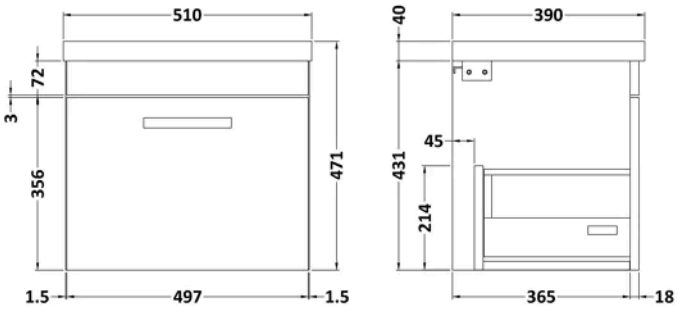

Product Dimensions

Product	471 x 500 x 390mm (H x W x D)
Packaged	550 x 550 x 550mm (H x W x D)
Nett Weight	21.58 kg
Packaged Weight	22.08 kg

Packaging Details

Box Qty	3

Product Details

Country of Origin	China
Product Material	Vitreous China
Colour/Finish	Gloss Grey
Mount Type	Wall Hung
Style	Contemporary
Handle Type	Strap
Construction Method	Cam & Wood Dowel
Construction Type	Rigid
Fascia Finish	Mdf Painted Gloss
Handles Included	Yes
Inner Bowl Height	125 mm
Material Thickness	16 mm
No. Drawers	1
No. Of Tapholes	1
Number Of Bowls	1
Overflow Included	Yes
Tap Included	No

© ROXOR Group

Sales Code: H028 **Barcode:** 5056211887348 **Brand:** nuie **Description:** 160mm Black D Handle



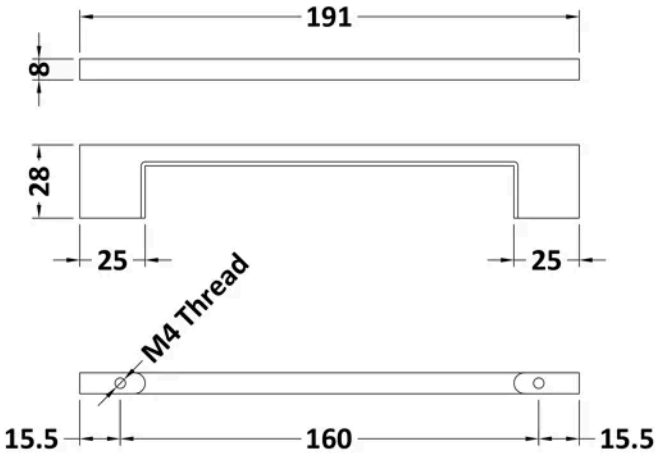

Product Dimensions

Product	28 x 191 x 8mm (H x W x D)
Packaged	190 x 15 x 30mm (H x W x D)
Nett Weight	0.08 kg
Packaged Weight	0.08 kg

Packaging Details

Box Qty	1
Label Size (mm)	50 x 100
Label Colour	White
Label Qty	1.0000

Product Details

Country of Origin	China
Product Material	Brass
Colour/Finish	Black
Style	Contemporary
Handle Type	D Shape
Fixings Included	Yes

© ROXOR Group

Sales Code: MOC382 **Barcode:** 5055275869956 **Brand:** nuie **Description:** nuie Athena 500mm Gloss Grey 1 Drawer Wall Hung Vanity Unit

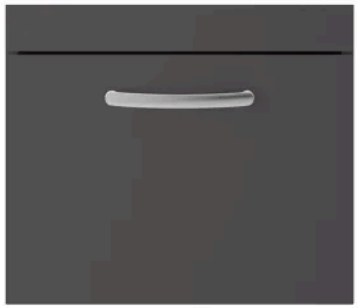

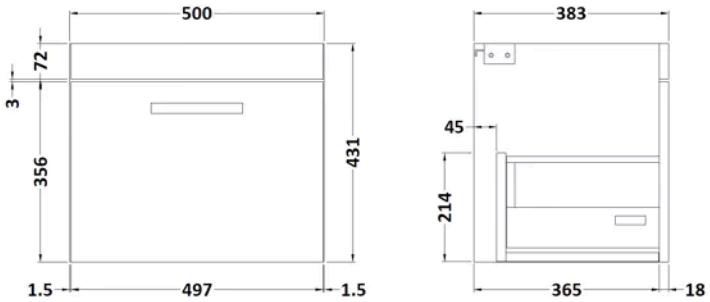

Product Dimensions

Product	430 x 500 x 383mm (H x W x D)
Packaged	450 x 520 x 405mm (H x W x D)
Nett Weight	12 kg
Packaged Weight	12.5 kg

Packaging Details

Box Qty	1

Product Details

Country of Origin	United Kingdom
Product Material	Mdf Painted Gloss
Colour/Finish	Gloss Grey
Mount Type	Wall Hung
Style	Contemporary
Construction Method	Cam & Wood Dowel
Construction Type	Rigid
Fascia Finish	Mdf Painted Gloss
Handles Included	Yes
Material Thickness	18 mm
No. Drawers	1
No. Shelves	1
Number Of Shelves	1

© ROXOR Group

Sales Code: NVM012 **Barcode:** 5055369043446 **Brand:** nuie **Description:** 1 Tap Hole 500mm Mid-Edge Ceramic Basin



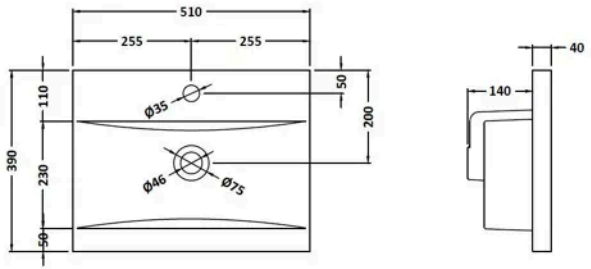

Product Dimensions

Product	180 x 510 x 390mm (H x W x D)
Packaged	400 x 530 x 200mm (H x W x D)
Nett Weight	10 kg
Packaged Weight	10 kg

Packaging Details

Box Qty	1

Product Details

Country of Origin	China
Product Material	Vitreous China
Colour/Finish	White
Style	Contemporary
Ce Certified	Yes
Inner Bowl Height	125 mm
No. Of Tapholes	1
Number Of Bowls	1
Overflow Included	Yes
Tap Included	No
Waste Included	No

© ROXOR Group