Sales Code: ATH020A7 **Barcode:** 5056462637624 **Brand:** nuie **Description:** nuie Athena Gloss White 500mm 2 Drawer Wall Hung Vanity Unit With Mid Edge Basin



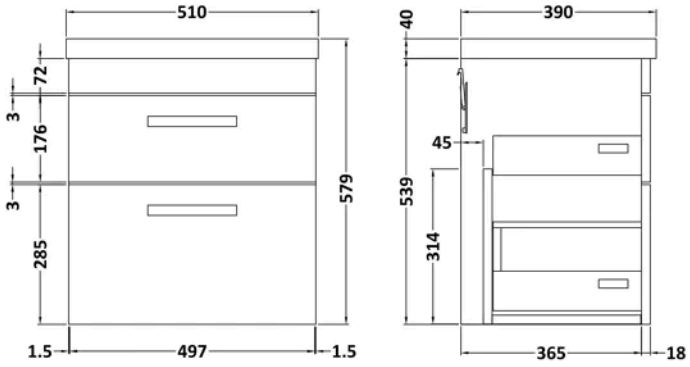

Product Dimensions

Product	578 x 500 x 390mm (H x W x D)
Packaged	550 x 550 x 550mm (H x W x D)
Nett Weight	27.65 kg
Packaged Weight	0.01 kg

Packaging Details

Box Qty	4

Product Details

Country of Origin	China
Product Material	Mfc Painted Gloss
Colour/Finish	Gloss White
Mount Type	Wall Hung
Style	Contemporary
Handle Type	Strap
Construction Method	Cam & Wood Dowel
Construction Type	Rigid
Fascia Finish	Mdf Painted Gloss
Handles Included	Yes
Inner Bowl Height	125 mm
Material Thickness	16 mm
No. Drawers	2
No. Of Tapholes	1
Number Of Bowls	1
Overflow Included	Yes
Tap Included	No

© ROXOR Group

Sales Code: H111 **Barcode:** 5056211899488 **Brand:** nuie **Description:** Handles Square Knob 32mm Centres



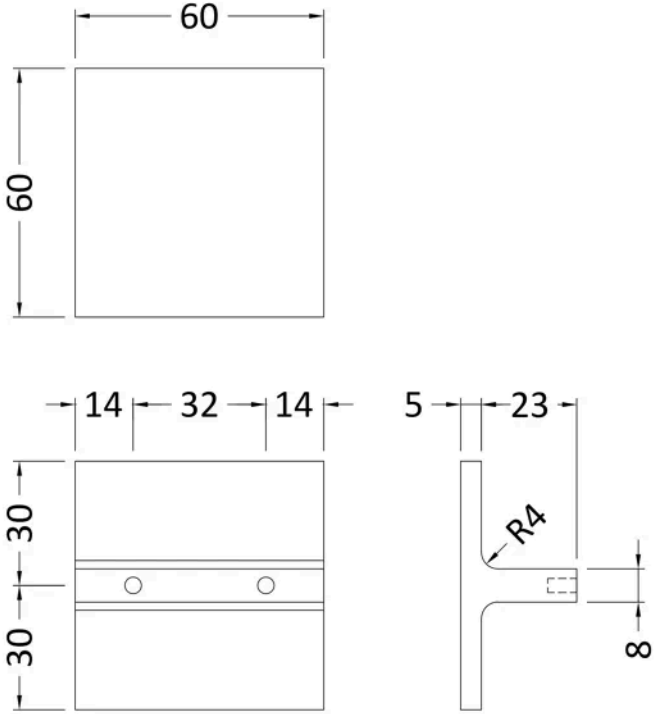

Product Dimensions

Product	60 x 60 x 28mm (H x W x D)
Packaged	41 x 20 x 30mm (H x W x D)
Nett Weight	0.07 kg
Packaged Weight	0.07 kg

Packaging Details

Box Qty	1
Label Size (mm)	50 x 100
Label Colour	White
Label Qty	1.0000

Product Details

Country of Origin	Turkey
Product Material	Aluminium
Colour/Finish	Chrome
Style	Contemporary
Handle Type	Square
Fixings Included	Yes
Product Diameter	60 mm

© ROXOR Group

Sales Code: MOE192 **Barcode:** 5055275880609 **Brand:** nuie **Description:** nuie Athena 500mm Gloss White 2 Drawer Vanity Unit

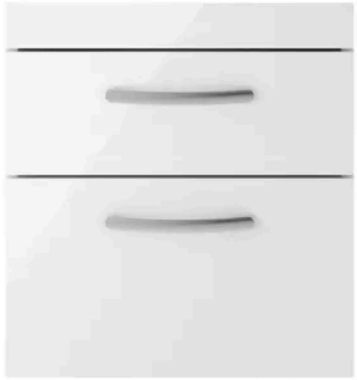

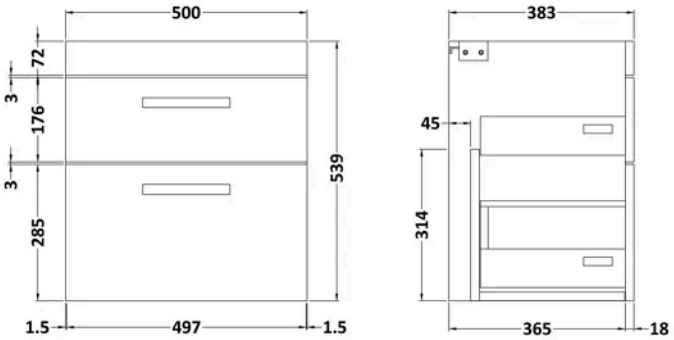

Product Dimensions

Product	538 x 500 x 383mm (H x W x D)
Packaged	450 x 525 x 405mm (H x W x D)
Nett Weight	17.5 kg
Packaged Weight	18 kg

Packaging Details

Box Qty	1

Product Details

Country of Origin	China
Product Material	Mdf Painted Gloss
Colour/Finish	Gloss White
Mount Type	Wall Hung
Style	Contemporary
Construction Method	Cam & Wood Dowel
Construction Type	Rigid
Fascia Finish	Mdf Painted Gloss
Handles Included	Yes
Material Thickness	18 mm
No. Drawers	2

© ROXOR Group

Sales Code: NVM012 **Barcode:** 5055369043446 **Brand:** nuie **Description:** 1 Tap Hole 500mm Mid-Edge Ceramic Basin



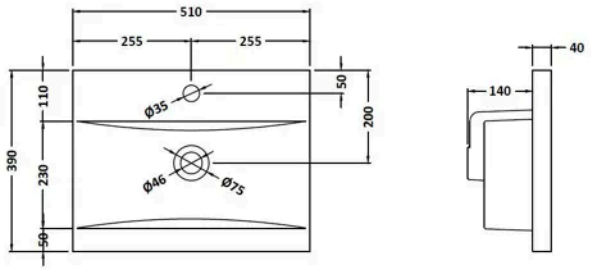

Product Dimensions

Product	180 x 510 x 390mm (H x W x D)
Packaged	400 x 530 x 200mm (H x W x D)
Nett Weight	10 kg
Packaged Weight	10 kg

Packaging Details

Box Qty	1

Product Details

Country of Origin	China
Product Material	Vitreous China
Colour/Finish	White
Style	Contemporary
Ce Certified	Yes
Inner Bowl Height	125 mm
No. Of Tapholes	1
Number Of Bowls	1
Overflow Included	Yes
Tap Included	No
Waste Included	No

© ROXOR Group