Sales Code: ARN625LCM-S

Barcode: 5064007070102

Brand: nuie

Description: nuie Arno Charcoal Black Woodgrain 800mm 1 Drawer Wall Hung Vanity Unit With Carrara Laminate Worktop And Shelf



Technical Drawing Not Available

Product Dimensions

Product	381 x 805 x 390mm (H x W x D)
Nett Weight	19.25 kg
Packaged Weight	19.75 kg

Product Details

Country of Origin	United Kingdom
Product Material	Mfc Textured Woodgrain
Colour/Finish	Charcoal Black Woodgrain
Mount Type	Wall Hung
Style	Contemporary
Handle Type	D Shape
Construction Method	Cam & Wood Dowel
Construction Type	Rigid
Drawer Type	80mm High Metal Soft-close
Fascia Finish	Mfc Smooth Woodgrain
Fsc Certified	Yes
Handle Material	Metal
Handles Included	Yes
Material Thickness	18 mm
No. Drawers	1
No. Shelves	1
Number Of Shelves	1
Waste Shroud	Yes

© ROXOR Group

Sales Code: 154048SB **Barcode:** 5056462654942 **Brand:** nuie **Description:** Dark Grey Shelf Support Brackets



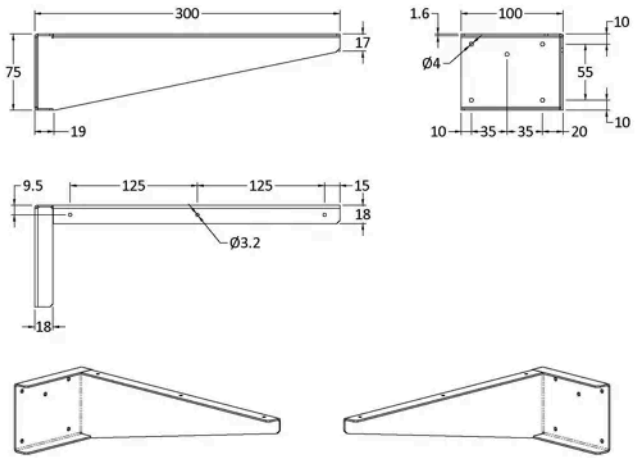

Product Dimensions

Product	300 x 100 x 50mm (H x W x D)
Packaged	90 x 130 x 330mm (H x W x D)
Nett Weight	0.72 kg
Packaged Weight	0.72 kg

Product Details

Country of Origin	China
Product Material	Stainless Steel
Colour/Finish	Dark Grey
Style	Contemporary

© ROXOR Group

Sales Code: LCM800 **Barcode:** 5056462624457 **Brand:** nuie **Description:** 805 x 390mm Carrera Marble Laminate Worktop



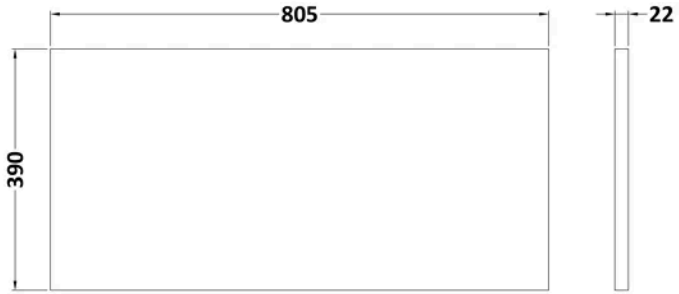

Product Dimensions

Product	22 x 805 x 390mm (H x W x D)
Packaged	25 x 810 x 455mm (H x W x D)
Nett Weight	2.75 kg
Packaged Weight	2.75 kg

Packaging Details

Box Qty	1

Product Details

Country of Origin	United Kingdom
Product Material	Mfc Laminated
Colour/Finish	Carrera Marble
Style	Contemporary

© ROXOR Group

Sales Code: MWD670N **Barcode:** 5056462660400 **Brand:** nuie **Description:** nuie 800mm Charcoal Black Woodgrain Worktop

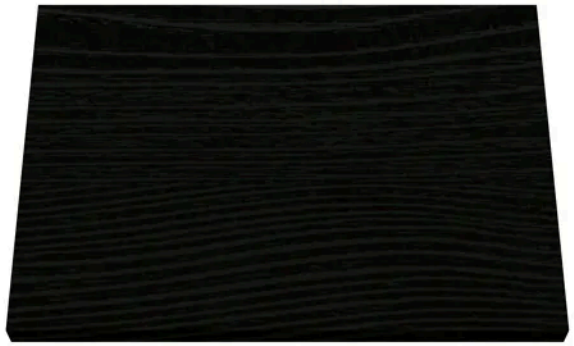

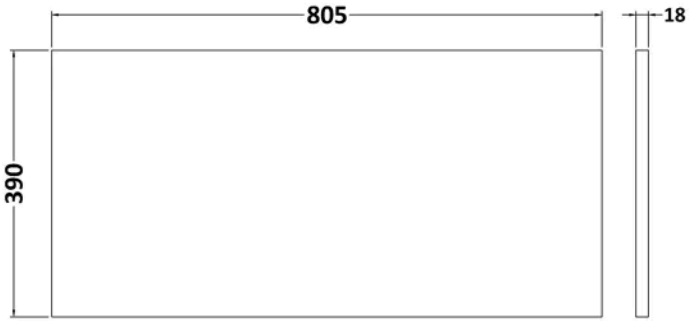

Product Dimensions

Product	18 x 805 x 390mm (H x W x D)
Packaged	25 x 825 x 410mm (H x W x D)
Nett Weight	3.5 kg
Packaged Weight	3.5 kg

Packaging Details

Box Qty	1

Product Details

Product Material	Mfc Textured Woodgrain
Colour/Finish	Charcoal Black Woodgrain

© ROXOR Group

Sales Code: NVF625N **Barcode:** 5056462660899 **Brand:** nuie **Description:** nuie Arno 800mm Charcoal Black Woodgrain 1 Drawer Wall Hung Vanity Unit



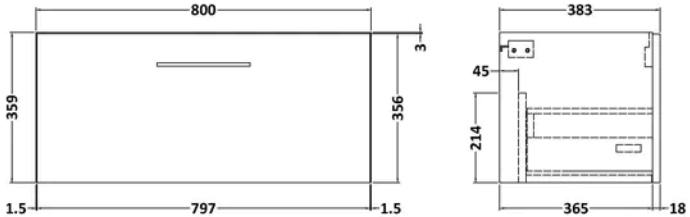

Product Dimensions

Product	359 x 800 x 383mm (H x W x D)
Packaged	391 x 832 x 391mm (H x W x D)
Nett Weight	17 kg
Packaged Weight	17.5 kg

Packaging Details

Box Qty	1

Product Details

Country of Origin	China
Product Material	Mfc Textured Woodgrain
Colour/Finish	Charcoal Black Woodgrain
Mount Type	Wall Hung
Style	Contemporary
Construction Method	Cam & Wood Dowel
Construction Type	Rigid
Fascia Finish	Mfc Textured Woodgrain
Handles Included	Yes
Material Thickness	18 mm
No. Drawers	1
No. Shelves	1
Number Of Shelves	1

© ROXOR Group