Sales Code: ARN2925W-S

Barcode: 5064007068222

Brand: nuie

Description: nuie Arno Midnight Blue 800mm 1 Drawer Wall Hung Vanity Unit With Co-ordinating Worktop And Shelf



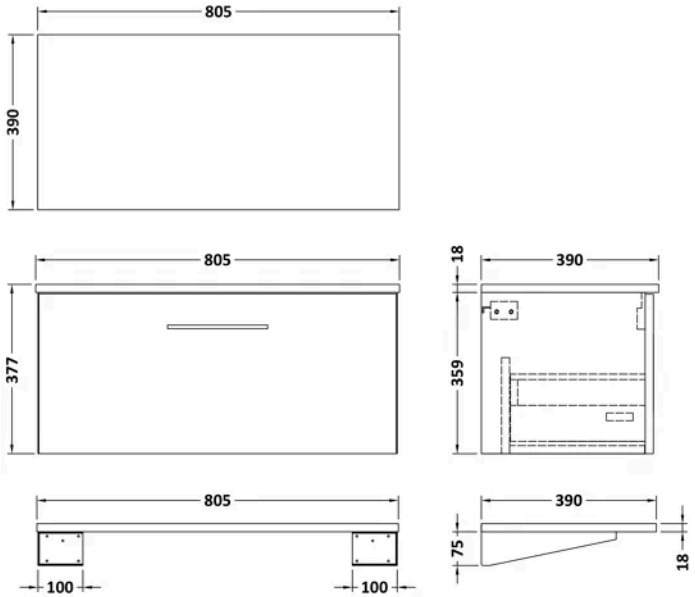

Product Dimensions

Product	377 x 805 x 390mm (H x W x D)
Packaged	380 x 820 x 405mm (H x W x D)
Nett Weight	20 kg
Packaged Weight	20.5 kg

Product Details

Country of Origin	China
Product Material	Mfc Painted Matt
Colour/Finish	Midnight Blue
Mount Type	Wall Hung
Style	Contemporary
Handle Type	D Shape
Construction Method	Cam & Wood Dowel
Construction Type	Rigid
Drawer Type	80mm High Metal Soft-close
Fascia Finish	Mfc Painted Matt
Fsc Certified	Yes
Handle Material	Metal
Handles Included	Yes
Material Thickness	16 mm
No. Drawers	1
No. Shelves	1
Number Of Shelves	1
Waste Shroud	Yes

© ROXOR Group

Sales Code: 154048SB **Barcode:** 5056462654942 **Brand:** nuie **Description:** Dark Grey Shelf Support Brackets



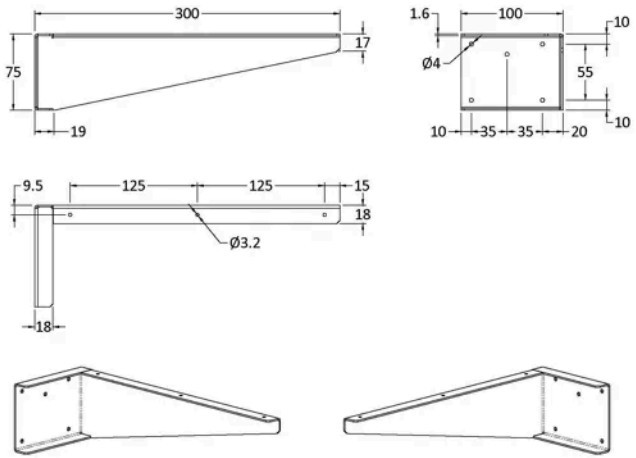

Product Dimensions

Product	300 x 100 x 50mm (H x W x D)
Packaged	90 x 130 x 330mm (H x W x D)
Nett Weight	0.72 kg
Packaged Weight	0.72 kg

Product Details

Country of Origin	China
Product Material	Stainless Steel
Colour/Finish	Dark Grey
Style	Contemporary

© ROXOR Group

Sales Code: MWD2980 **Barcode:** 5056678447406 **Brand:** nuie **Description:** 805 x 390mm Midnight Blue MDF Matt Worktop



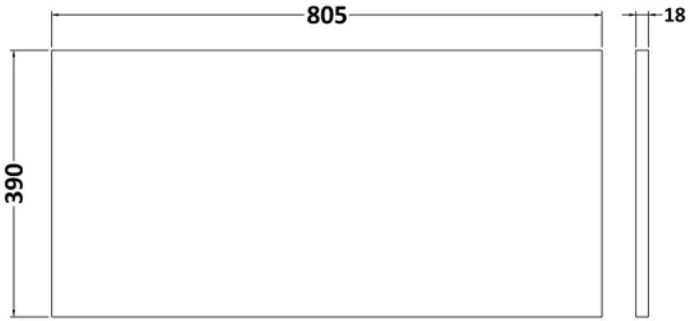

Product Dimensions

Product	18 x 805 x 390mm (H x W x D)
Packaged	25 x 825 x 410mm (H x W x D)
Nett Weight	3.5 kg
Packaged Weight	3.5 kg

Packaging Details

Box Qty	1

Product Details

Country of Origin	China
Product Material	Mdf Painted Matt
Colour/Finish	Midnight Blue
Style	Contemporary

© ROXOR Group

Sales Code: NVF2925 **Barcode:** 5056678447314 **Brand:** nuie **Description:** nuie Arno 800mm Midnight Blue 2 Drawer Wall Hung Vanity Unit

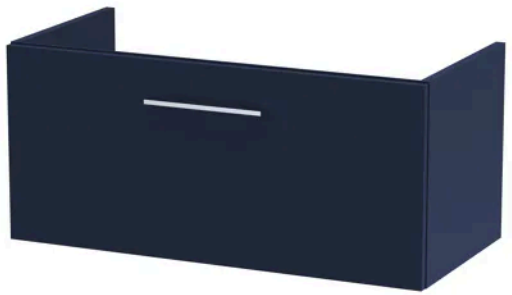

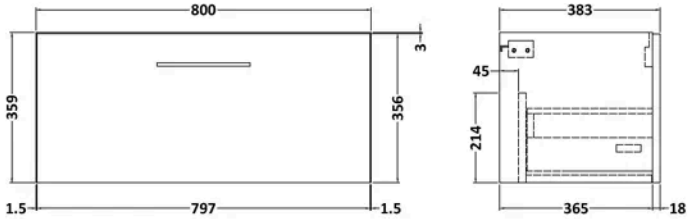

Product Dimensions

Product	359 x 800 x 383mm (H x W x D)
Packaged	391 x 832 x 391mm (H x W x D)
Nett Weight	17 kg
Packaged Weight	17.5 kg

Packaging Details

Box Qty	1

Product Details

Country of Origin	China
Product Material	Mdf Painted Matt
Colour/Finish	Midnight Blue
Mount Type	Wall Hung
Style	Contemporary
Construction Method	Cam & Wood Dowel
Construction Type	Rigid
Fascia Finish	Mdf Painted Matt
Handles Included	Yes
Material Thickness	18 mm
No. Drawers	2

© ROXOR Group