**Sales Code:** ARN2522LBG-S

**Barcode:** 5064007068109

**Brand:** nuie

**Description:** nuie Arno Solace Oak 600mm 1 Drawer Wall Hung Vanity Unit With Bellato Grey Worktop and Shelf



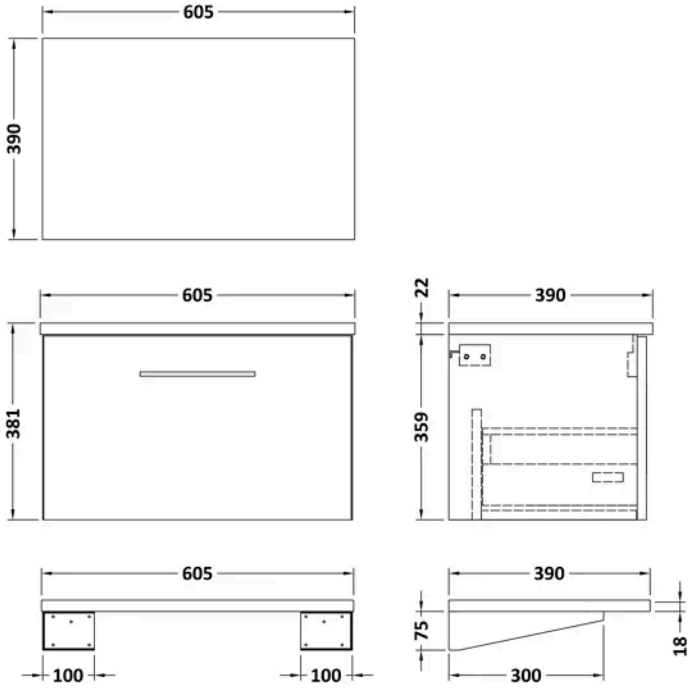


## Product Dimensions

| | |
|---|---|
| Product | 381 x 605 x 390mm (H x W x D) |
| Packaged | 391 x 632 x 391mm (H x W x D) |
| Nett Weight | 14.5 kg |
| Packaged Weight | 15 kg |

## Product Details

| | |
|---|---|
| Country of Origin | United Kingdom |
| Product Material | Mfc Textured Woodgrain |
| Colour/Finish | Solace Oak |
| Mount Type | Wall Hung |
| Style | Contemporary |
| Handle Type | D Shape |
| Construction Method | Cam & Wood Dowel |
| Construction Type | Rigid |
| Drawer Type | 80mm High Metal Soft-close |
| Fascia Finish | Mfc Smooth Woodgrain |
| Fsc Certified | Yes |
| Handle Material | Metal |
| Handles Included | Yes |
| Material Thickness | 18 mm |
| No. Drawers | 1 |
| No. Shelves | 1 |
| Number Of Shelves | 1 |
| Waste Shroud | Yes |

© ROXOR Group

**Sales Code:** 154048SB **Barcode:** 5056462654942 **Brand:** nuie **Description:** Dark Grey Shelf Support Brackets



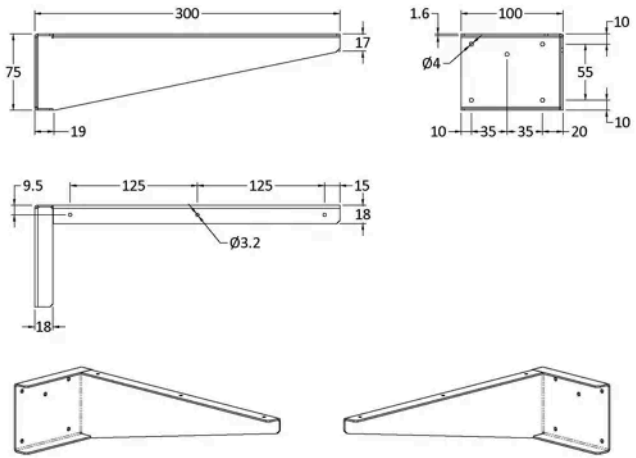


## Product Dimensions

| | |
|---|---|
| Product | 300 x 100 x 50mm (H x W x D) |
| Packaged | 90 x 130 x 330mm (H x W x D) |
| Nett Weight | 0.72 kg |
| Packaged Weight | 0.72 kg |

## Product Details

| | |
|---|---|
| Country of Origin | China |
| Product Material | Stainless Steel |
| Colour/Finish | Dark Grey |
| Style | Contemporary |

© ROXOR Group

**Sales Code:** LBG600 **Barcode:** 5056211874164 **Brand:** nuie **Description:** 600mm Bellato Grey Laminate Worktop

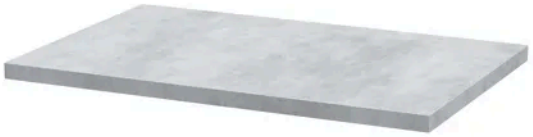

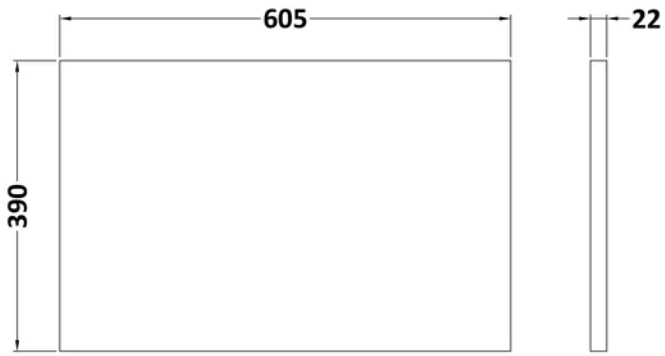


## Product Dimensions

| | |
|---|---|
| Product | 22 x 605 x 390mm (H x W x D) |
| Packaged | 25 x 610 x 455mm (H x W x D) |
| Nett Weight | 2 kg |
| Packaged Weight | 2 kg |

## Packaging Details

| | |
|---|---|
| Box Qty | 1 |

## Product Details

| | |
|---|---|
| Country of Origin | United Kingdom |
| Product Material | Mfc Laminated |
| Colour/Finish | Bellato Grey |
| Style | Contemporary |

© ROXOR Group

**Sales Code:** MWD2560 **Barcode:** 5056462660073 **Brand:** nuie **Description:** nuie Arno 600mm Solace Oak MFC Woodgrain Worktop



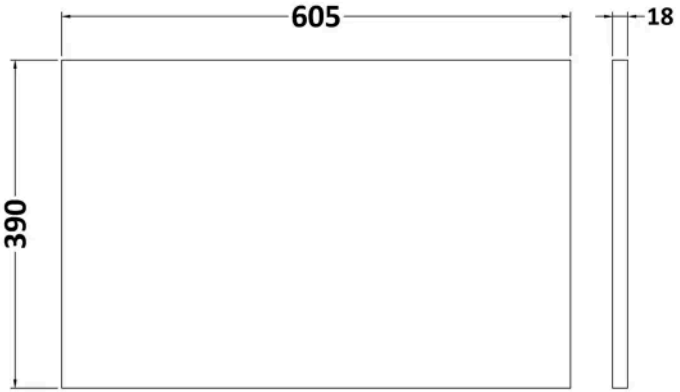


## Product Dimensions

| | |
|---|---|
| Product | 18 x 605 x 390mm (H x W x D) |
| Packaged | 25 x 625 x 410mm (H x W x D) |
| Nett Weight | 2.5 kg |
| Packaged Weight | 3 kg |

## Packaging Details

| | |
|---|---|
| Box Qty | 1 |

## Product Details

| | |
|---|---|
| Product Material | Mfc Textured Woodgrain |
| Colour/Finish | Solace Oak |

© ROXOR Group

**Sales Code:** NVF2522 **Barcode:** 5056462660813 **Brand:** nuie **Description:** nuie Arno 600mm Solace Oak 1 Drawer Wall Hung Vanity Unit



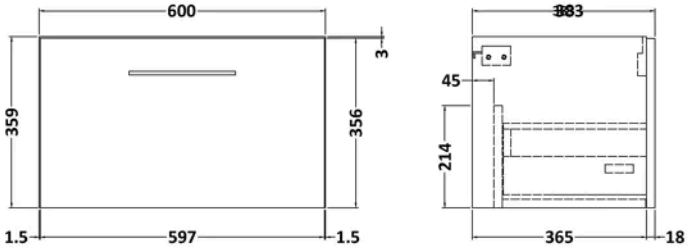


## Product Dimensions

| | |
|---|---|
| Product | 359 x 600 x 383mm (H x W x D) |
| Packaged | 391 x 632 x 391mm (H x W x D) |
| Nett Weight | 13 kg |
| Packaged Weight | 13.5 kg |

## Packaging Details

| | |
|---|---|
| Box Qty | 1 |

## Product Details

| | |
|---|---|
| Country of Origin | China |
| Product Material | Mfc Textured Woodgrain |
| Colour/Finish | Solace Oak |
| Mount Type | Wall Hung |
| Style | Contemporary |
| Construction Method | Cam & Wood Dowel |
| Construction Type | Rigid |
| Handles Included | Yes |
| Material Thickness | 18 mm |
| No. Drawers | 1 |
| No. Shelves | 1 |
| Number Of Shelves | 1 |

© ROXOR Group