Sales Code: ARN122W-S

Barcode: 5064007068048

Brand: nuie

Description: nuie Arno Gloss White 600mm 1 Drawer Wall Hung Vanity Unit With Co-ordinating Worktop and Shelf



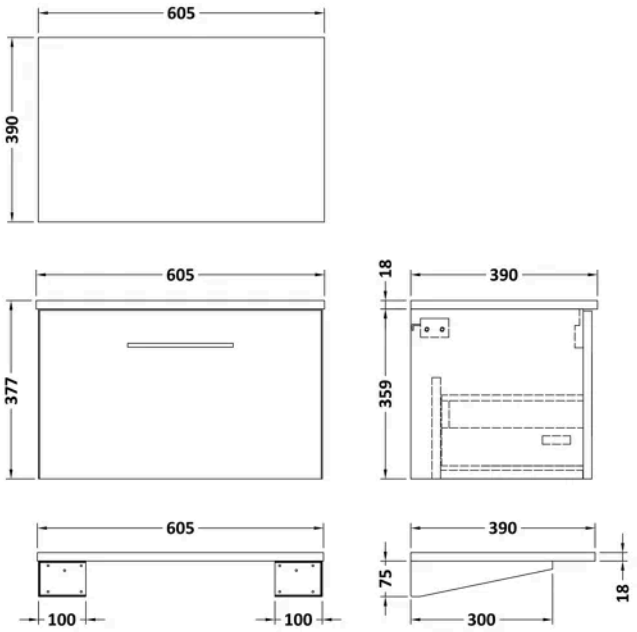

Product Dimensions

Product	377 x 605 x 390mm (H x W x D)
Packaged	380 x 620 x 405mm (H x W x D)
Nett Weight	15 kg
Packaged Weight	15.5 kg

Product Details

Country of Origin	China
Product Material	Mfc Painted Gloss
Colour/Finish	Gloss White
Mount Type	Wall Hung
Style	Contemporary
Handle Type	D Shape
Construction Method	Cam & Wood Dowel
Construction Type	Rigid
Drawer Type	80mm High Metal Soft-close
Fascia Finish	Mdf Painted Gloss
Fsc Certified	Yes
Handle Material	Metal
Handles Included	Yes
Material Thickness	16 mm
No. Drawers	1
No. Shelves	1
Number Of Shelves	1
Waste Shroud	Yes

© ROXOR Group

Sales Code: 154048SB **Barcode:** 5056462654942 **Brand:** nuie **Description:** Dark Grey Shelf Support Brackets



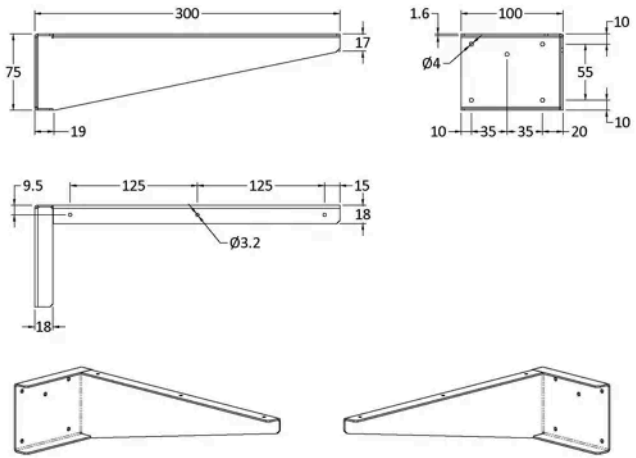

Product Dimensions

Product	300 x 100 x 50mm (H x W x D)
Packaged	90 x 130 x 330mm (H x W x D)
Nett Weight	0.72 kg
Packaged Weight	0.72 kg

Product Details

Country of Origin	China
Product Material	Stainless Steel
Colour/Finish	Dark Grey
Style	Contemporary

© ROXOR Group

Sales Code: MWD160 **Barcode:** 5055275826263 **Brand:** nuie **Description:** nuie Arno 600mm MDF Gloss Worktop

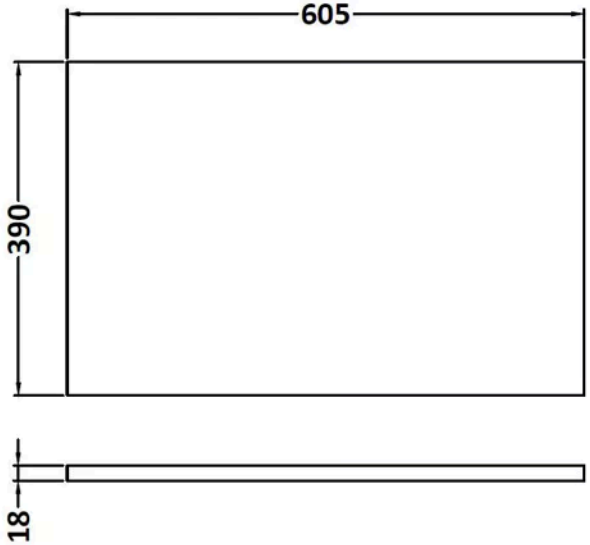

Product Dimensions

Product	18 x 605 x 390mm (H x W x D)
Packaged	25 x 625 x 410mm (H x W x D)
Nett Weight	2.5 kg
Packaged Weight	3 kg

Packaging Details

Box Qty	1

Product Details

Product Material	Mdf Painted Gloss
Colour/Finish	Gloss White

© ROXOR Group

Sales Code: NVF122 **Barcode:** 5056462660783 **Brand:** nuie **Description:** nuie Arno 600mm Gloss White Wall Hung Vanity Unit

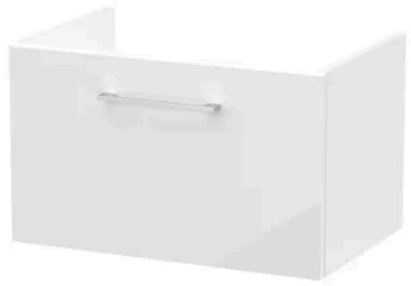

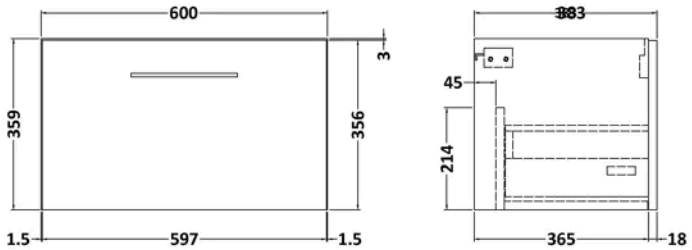

Product Dimensions

Product	359 x 600 x 383mm (H x W x D)
Packaged	391 x 632 x 391mm (H x W x D)
Nett Weight	13 kg
Packaged Weight	13.5 kg

Packaging Details

Box Qty	1

Product Details

Country of Origin	China
Product Material	Mfc Painted Gloss
Colour/Finish	Gloss White
Mount Type	Wall Hung
Style	Contemporary
Construction Method	Cam & Wood Dowel
Construction Type	Rigid
Fascia Finish	Mdf Painted Gloss
Material Thickness	18 mm
No. Drawers	1

© ROXOR Group