Sales Code: ARL-ETT08 **Barcode:** 5056474596278 **Brand:** Arley Pro **Description:** Arley Pro Ettore 300mm White Contemporary Semi Pedestal



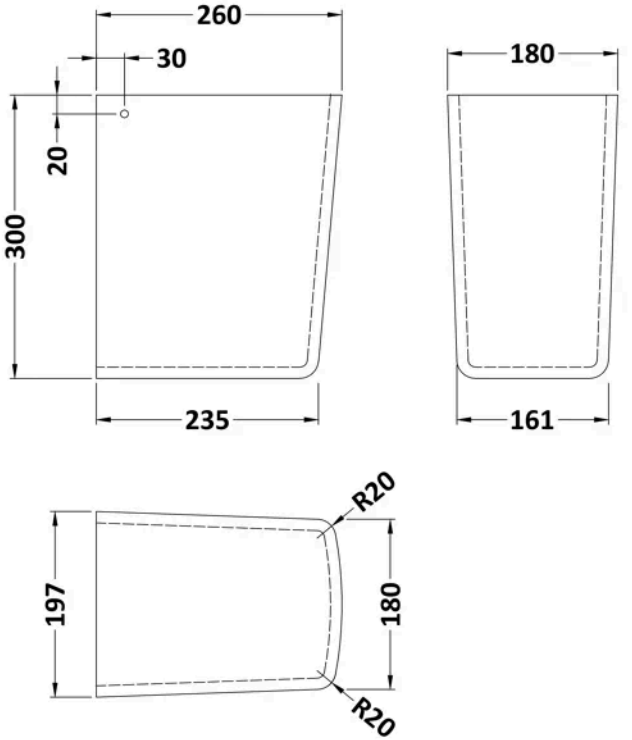

Product Dimensions

Product	300 x 197 x 260mm (H x W x D)
Packaged	315 x 215 x 275mm (H x W x D)
Nett Weight	7.6 kg
Packaged Weight	7.8 kg

Packaging Details

Box Qty	1

Product Details

Country of Origin	China
Product Material	Vitreous China
Colour/Finish	White
Mount Type	Wall Hung
Style	Contemporary
Ce Certified	Yes

© ROXOR Group