Sales Code: ARL-ETT07 **Barcode:** 5056474596261 **Brand:** Arley Pro **Description:** Arley Pro Ettore 600mm 1 Tap Hole Ceramic Basin



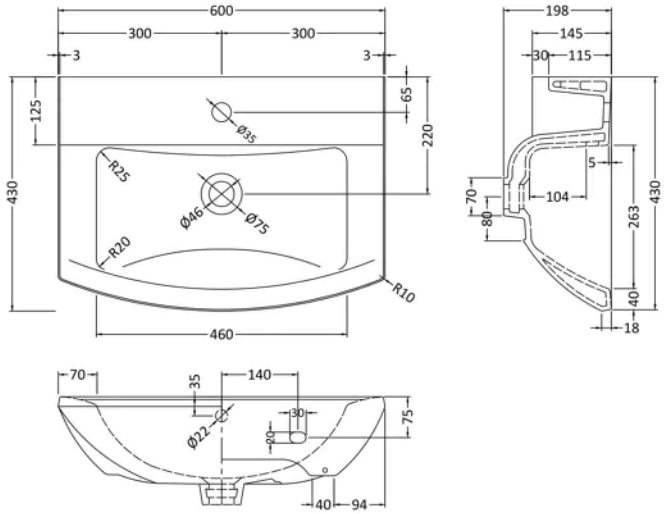

Product Dimensions

Product	198 x 600 x 430mm (H x W x D)
Packaged	210 x 630 x 480mm (H x W x D)
Nett Weight	16.9 kg
Packaged Weight	17.1 kg

Packaging Details

Box Qty	1

Product Details

Country of Origin	China
Product Material	Vitreous China
Colour/Finish	White
Style	Contemporary
Ce Certified	Yes
Inner Bowl Depth	263 mm
Inner Bowl Height	140 mm
No. Of Tapholes	1
Number Of Bowls	1
Overflow Included	Yes
Tap Included	No
Waste Included	No

© ROXOR Group